4 Electrical Installation

Warning

The voltages present in the Drive are capable of inflicting a severe electric shock and may be lethal. The Stop function of the Drive does not remove dangerous voltages from the Drive or the driven machine. AC supplies to the Drive must be disconnected using an approved isolation device before any cover is removed or service work is performed.

Warning

Electric shock risk

If the Drive has been energized, the supply must be isolated for at least fifteen minutes. This allows the internal capacitors to discharge fully before work may continue. Refer to *Safety information* on the inside front cover of this user guide.

4.1 Hazardous areas

Approval and certification for hazardous areas should be obtained for the complete installation of the motor and Drive.

4.2 Access to the power connectors

SA005

The main power connector and braking resistor connector are fitted to the top panel of the case.

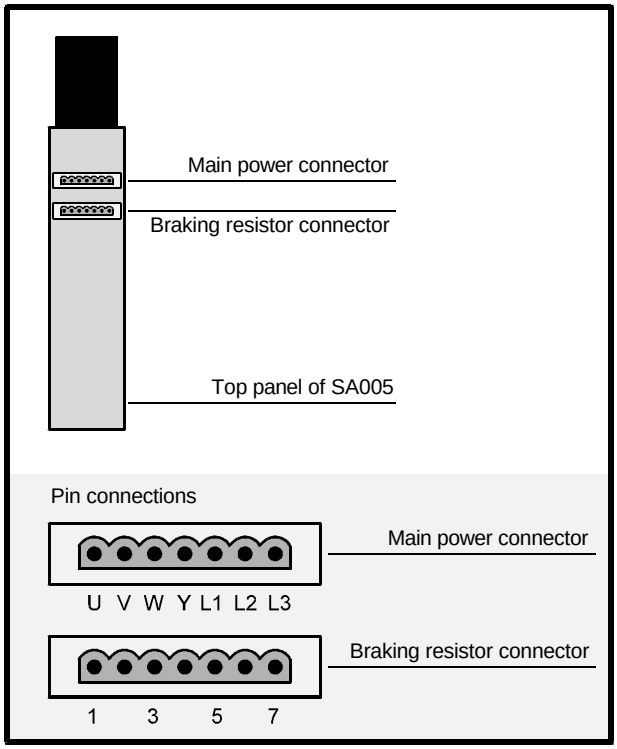

Figure 4–1 Locations of the main power connector and the braking resistor connector on model SA005 (only)

Main power connector

Pin	Function	Type	Notes
U	Phase U	Out	Output to motor
V	Phase V	Out	
W	Phase W	Out	
Y	PE		
L1	Phase L1	In	AC supply
L2	Phase L2	In	
L3	Phase L3	In	

Braking resistor connector

Pin	Function	Type	Notes
1	+DC bus	Out	External braking resistor connection
3	Internal braking resistor	Out	Internal braking resistor connection
5	External/ Internal braking resistor	Out	Controlled output
7	–DC bus	Out	

SA010, SA016, SA022

The power connector is fitted to the top panel of the case.

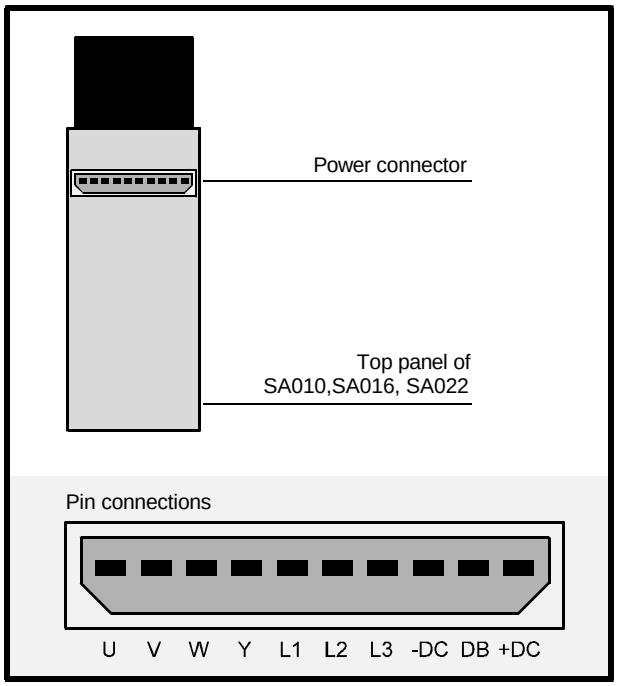

Figure 4–2 Location of the power connector on models SA010, SA016, SA022

Power connectors

Pin	Function	Type	Notes
U	Phase U	Out	Output to motor
V	Phase V	Out	
W	Phase W	Out	
Y	PE		
L1	Phase L1	In	AC supply
L2	Phase L2	In	
L3	Phase L3	In	
–DC	DC bus negative	Out	
BR	External braking resistor	Out	External braking resistor connections
+DC	+DC bus	Out	

SA038, SA059, SA091, SA110, SA150

The power terminals are located along the top and bottom edges of the front panel.

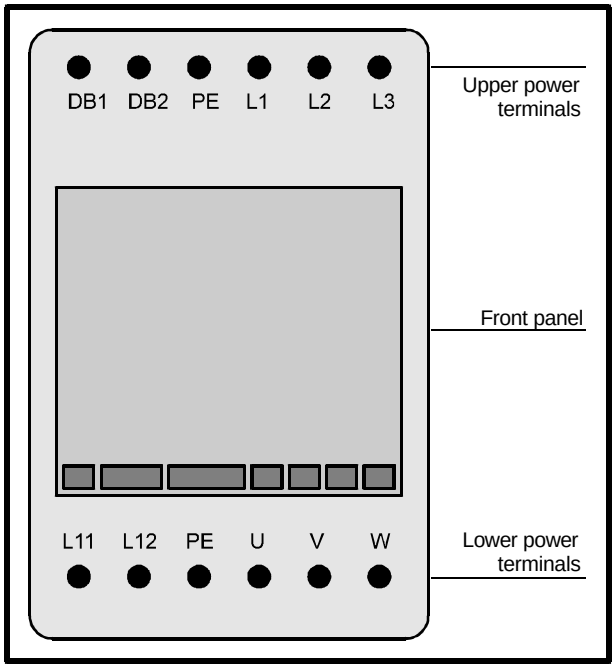

Figure 4–3 Locations of the power terminals on models SA038, SA059, SA091, SA110, SA150

Upper power terminals

Pin	Function	Type	Notes
DB1	External DC braking resistor	Out	+DC bus
DB2			
PE	Ground		
L1	Phase L1	In	AC power
L2	Phase L2	In	
L3	Phase L3	In	

Lower power terminals

Pin	Function	Type	Notes
L11	Choke		–DC bus
L12	Choke		
PE	Ground		
U	Phase U	Out	Output to motor
V	Phase V	Out	
W	Phase W	Out	

4.3 EMC wiring recommendations

Using the arrangement shown in Figure 4–4 does not guarantee that the specified standards for conducted and radiated emissions are met. Additional precautions and guidelines need to be considered. These are shown in Figures 4–5 and 4–6.

Note

Failure to follow the basic recommendations shown in Figure 4–4 may result in vibration in the motor or spurious trips in the Drive.

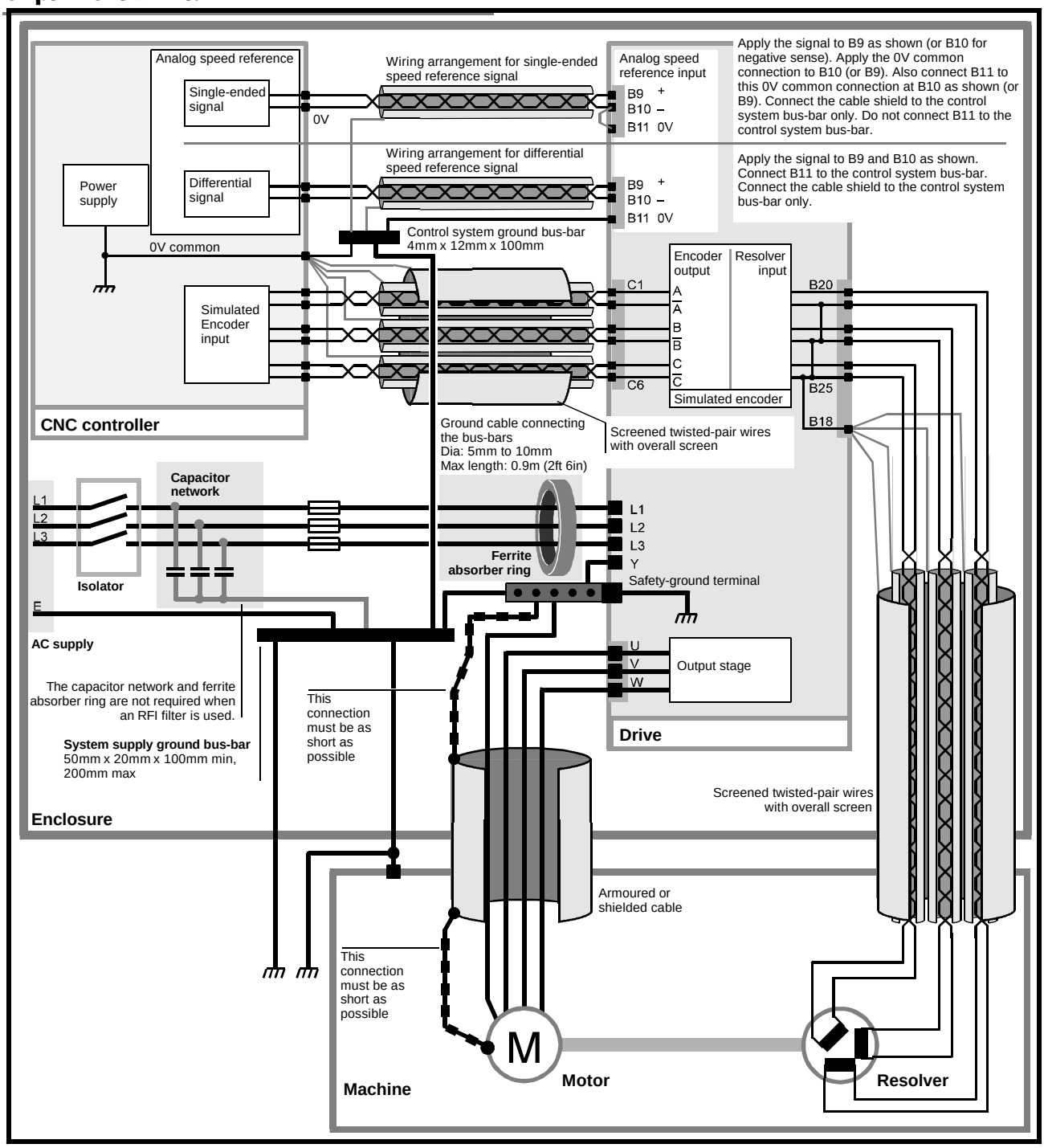

Figure 4–4 Recommended connections, ground arrangements and other minimum requirements to ensure good noise immunity

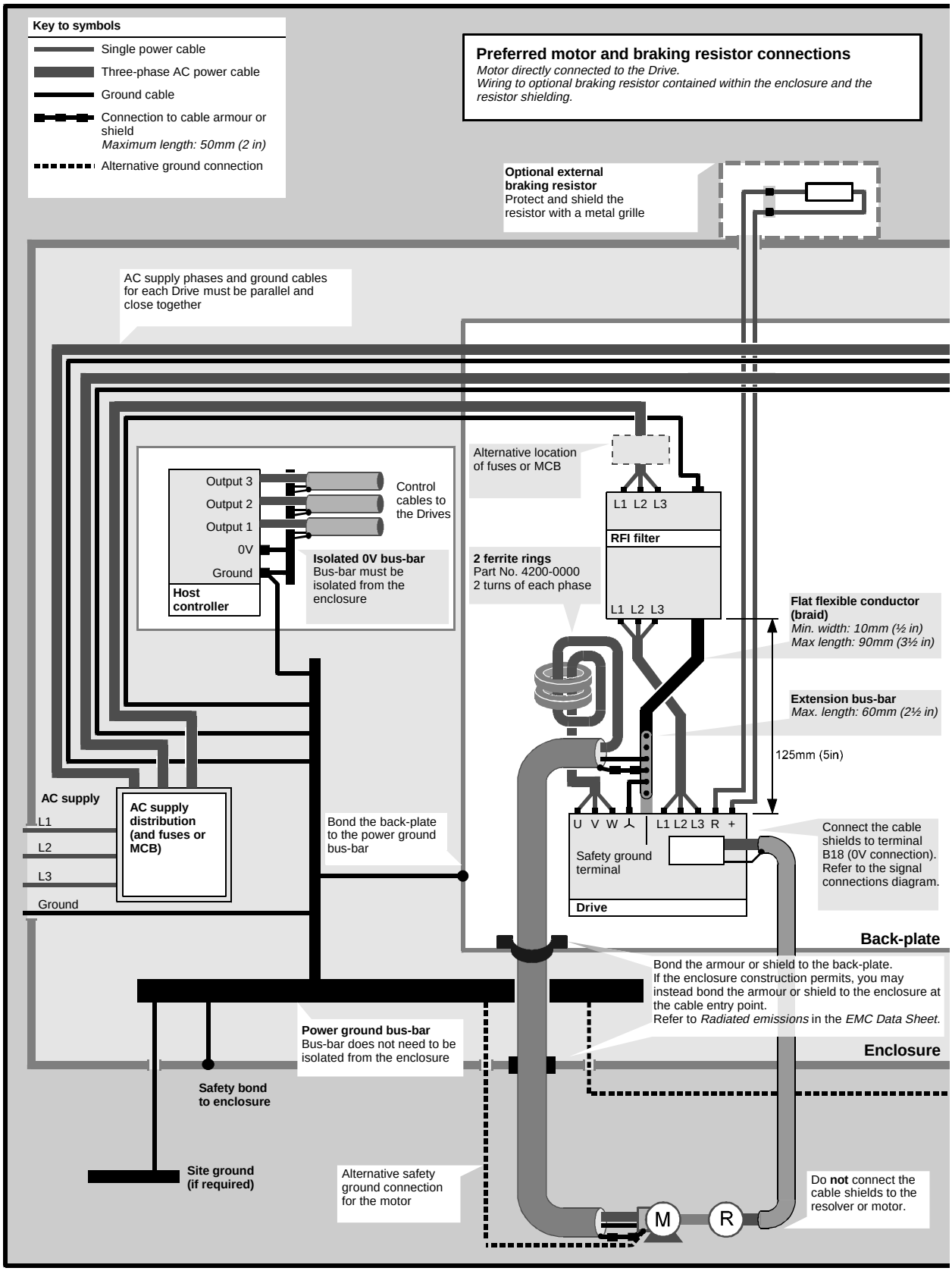

Figure 4–5 Models SA005 to SA022 — Recommended AC power and ground connections

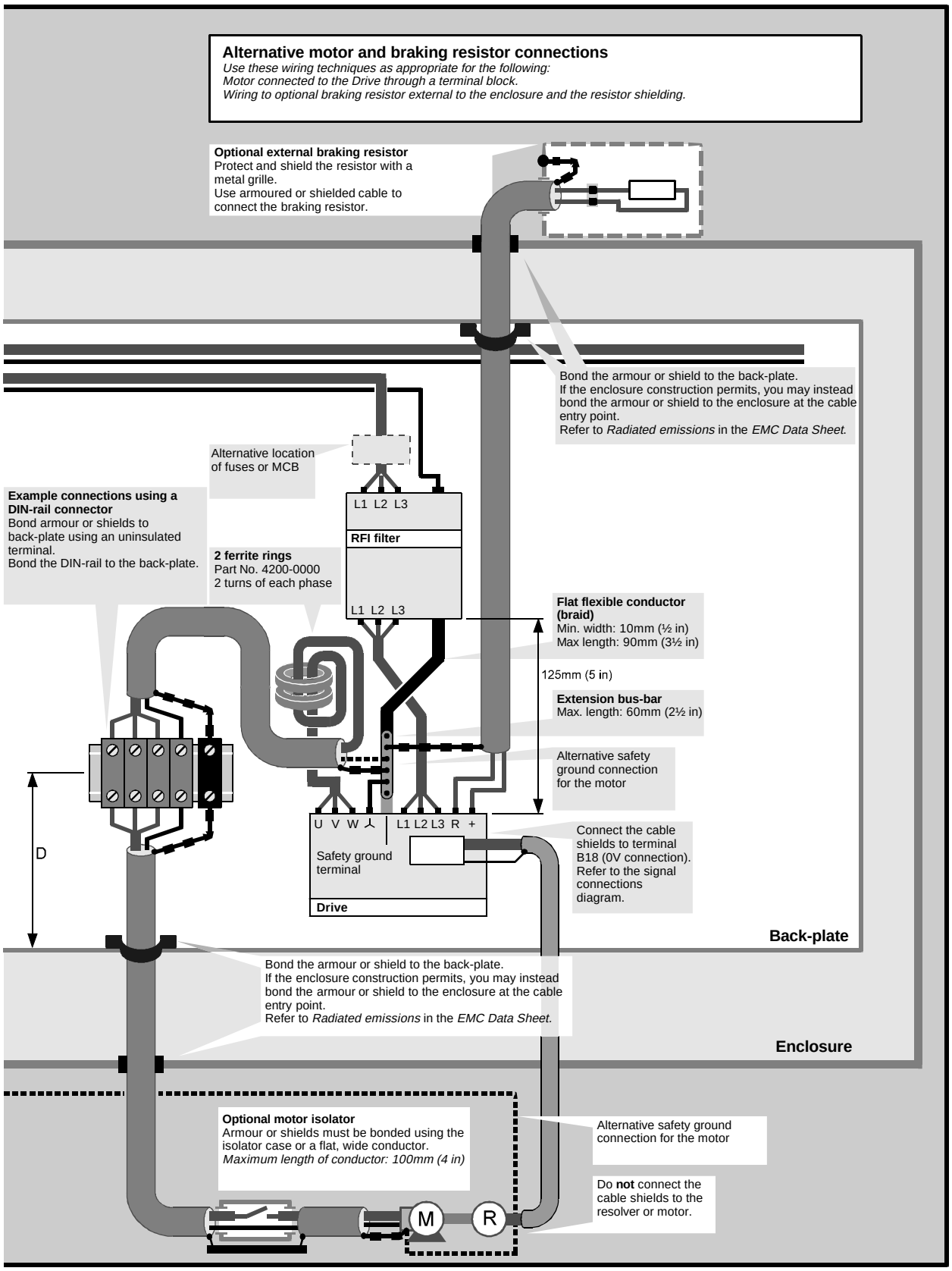
Alternative motor and braking resistor connections
Use these wiring techniques as appropriate for the following:
Motor connected to the Drive through a terminal block.
Wiring to optional braking resistor external to the enclosure and the resistor shielding.
Optional external braking resistor
Protect and shield the resistor with a metal grille.
Use armoured or shielded cable to connect the braking resistor.
Bond the armour or shield to the back-plate.
If the enclosure construction permits, you may instead bond the armour or shield to the enclosure at the cable entry point.
Refer to Radiated emissions in the EMC Data Sheet.
Alternative location of fuses or MCB
Example connections using a DIN-rail connector
Bond armour or shields to back-plate using an uninsulated terminal.
Bond the DIN-rail to the back-plate.
L1 L2 L3
RFI filter
2 ferrite rings
Part No. 4200-0000
2 turns of each phase
L1 L2 L3
Flat flexible conductor (braid)
Min. width: 10mm (½ in)
Max length: 90mm (3½ in)
125mm (5 in)
Extension bus-bar
Max. length: 60mm (2½ in)
Alternative safety ground connection for the motor
D
U V W
L1 L2 L3 R +
Safety ground terminal
Drive
Connect the cable shields to terminal B18 (0V connection). Refer to the signal connections diagram.
Back-plate
Bond the armour or shield to the back-plate.
If the enclosure construction permits, you may instead bond the armour or shield to the enclosure at the cable entry point.
Refer to Radiated emissions in the EMC Data Sheet.
Enclosure
Optional motor isolator
Armour or shields must be bonded using the isolator case or a flat, wide conductor.
Maximum length of conductor: 100mm (4 in)
Alternative safety ground connection for the motor
Do not connect the cable shields to the resolver or motor.
M
R

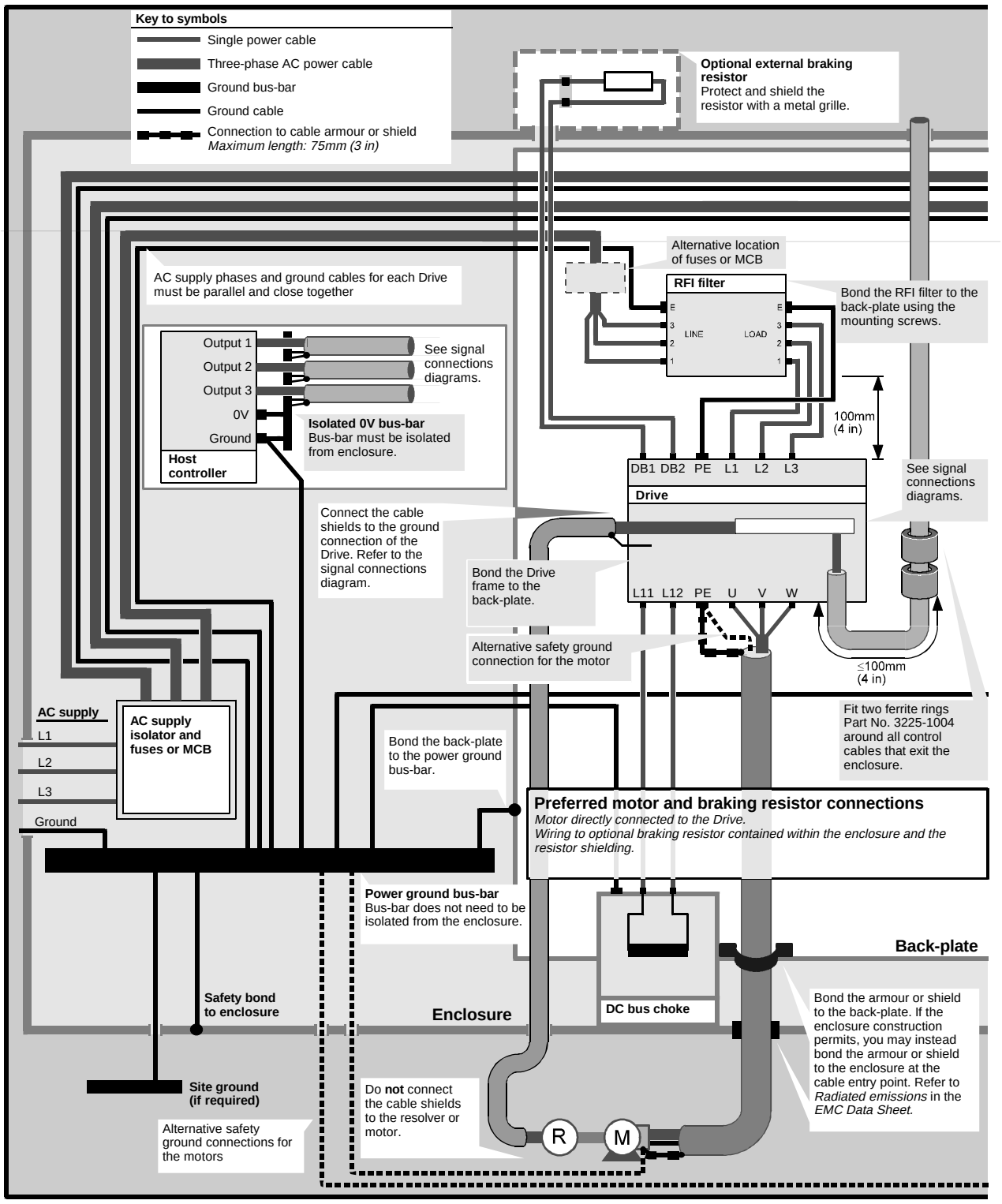

Figure 4–6 Models SA038 to SA150 — Recommended AC power and ground connections

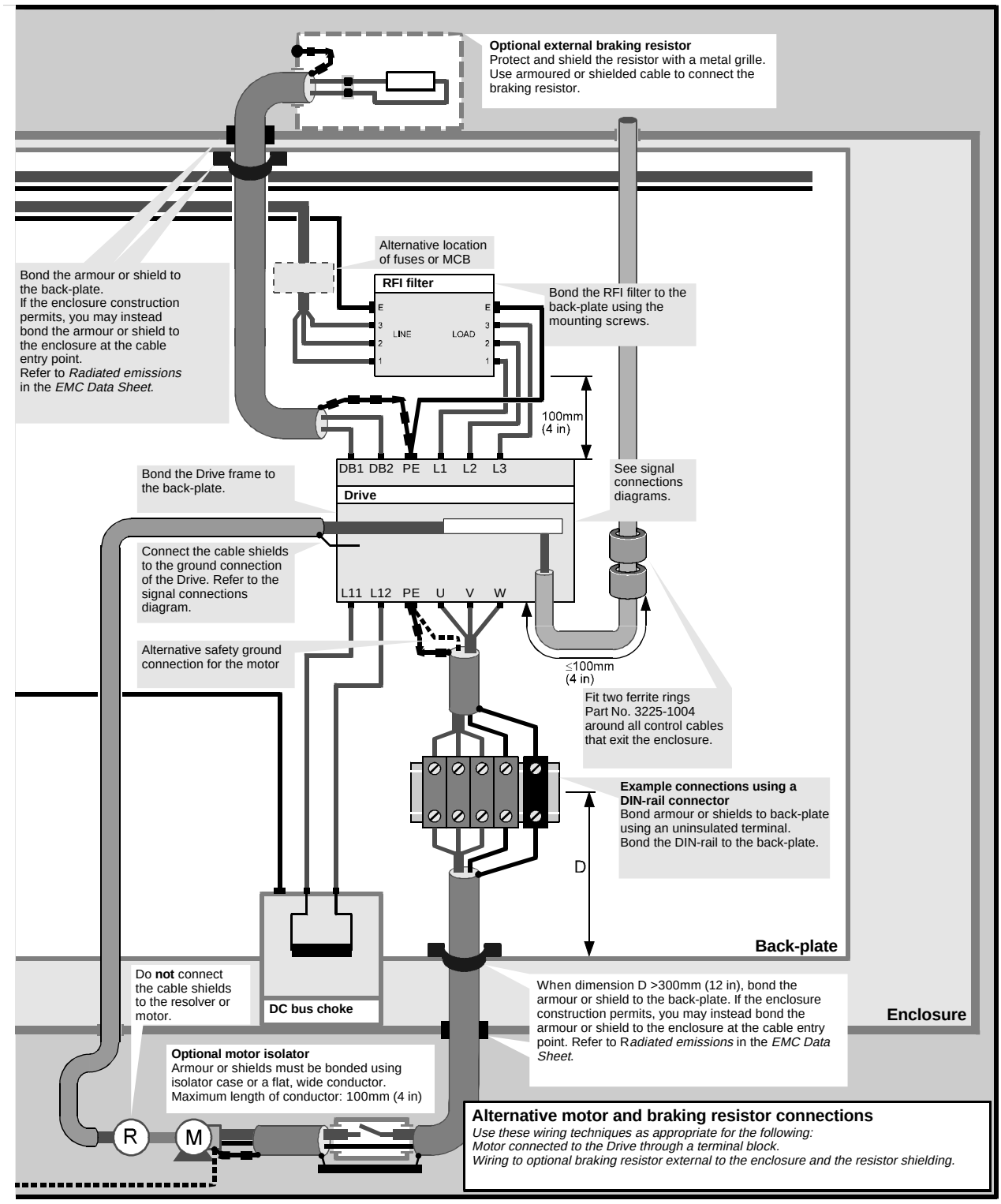
Optional external braking resistor
Protect and shield the resistor with a metal grille.
Use armoured or shielded cable to connect the braking resistor.
Alternative location of fuses or MCB
RFI filter
E
3
2
1
LINE
LOAD
Bond the RFI filter to the back-plate using the mounting screws.
Bond the armour or shield to the back-plate.
If the enclosure construction permits, you may instead bond the armour or shield to the enclosure at the cable entry point.
Refer to Radiated emissions in the EMC Data Sheet.
100mm (4 in)
DB1 DB2 PE L1 L2 L3
Drive
See signal connections diagrams.
Bond the Drive frame to the back-plate.
Connect the cable shields to the ground connection of the Drive. Refer to the signal connections diagram.
L11 L12 PE U V W
Alternative safety ground connection for the motor
≤100mm (4 in)
Fit two ferrite rings Part No. 3225-1004 around all control cables that exit the enclosure.
Example connections using a DIN-rail connector
Bond armour or shields to back-plate using an uninsulated terminal.
Bond the DIN-rail to the back-plate.
D
Back-plate
Do not connect the cable shields to the resolver or motor.
DC bus choke
When dimension D >300mm (12 in), bond the armour or shield to the back-plate. If the enclosure construction permits, you may instead bond the armour or shield to the enclosure at the cable entry point. Refer to Radiated emissions in the EMC Data Sheet.
Enclosure
Optional motor isolator
Armour or shields must be bonded using isolator case or a flat, wide conductor.
Maximum length of conductor: 100mm (4 in)
R
M
Alternative motor and braking resistor connections
Use these wiring techniques as appropriate for the following:
Motor connected to the Drive through a terminal block.
Wiring to optional braking resistor external to the enclosure and the resistor shielding.

4.4 AC supply cables and fuses

Warning

The AC supply to the Drive must be fitted with suitable protection against overload and short circuits. The table shows recommended fuse ratings. Failure to observe this recommendation will cause a risk of fire.

Warning

Wiring must be in accordance with local regulations and codes of practice. The table shows typical cable sizes for power input and output wiring. In the event of a conflict, local regulations prevail.

The following table is only a guide to cable sizes. Refer to local wiring regulations for the correct size of cables.

Model	AC supply cables		Motor cables		Fuse rating
	mm²	AWG	mm²	AWG	A
SA005	2.5	14	1.5	16	10
SA010	4.0	10	2.5	14	16
SA016	4.0	10	4.0	10	20
SA022	4.0	10	4.0	10	35
SA038	16	4	16	6	50
SA059	????				70
SA091					100
SA110					125
SA150					160

For the following connections, use 600VAC (1000VDC) 3-core pvc-insulated cable with copper conductors of the size specified in the table:

AC power to the Drive

For the following connections, use 600VAC (1000VDC) 3-core pvc-insulated, shielded or armoured cable with copper conductors of the size specified in the table:

Drive to the motor

Drive to external braking resistor (if used)

Cable sizes must be selected for 100% of the RMS currents.

Unusually long cable runs between the Drive and the motor may give rise to spurious tripping due to the effect of cable capacitance. As a result, an over-current fault would be indicated (OC). In this case, output chokes may be required. In difficult cases, consult the supplier of the Drive.

The AC power should be applied through an isolator and a fuse or circuit-breaker of the specified rating. Since a current surge can occur when AC power is applied to the Drive, the use of slow-blow fuses is recommended. As an alternative to fuses, an MCB or MCCB may be used if equipped with adjustable thermal and magnetic trip devices of a suitable rating.

The AC power should be applied through an isolator and a fuse or circuit-breaker of the specified rating. Since a current surge can occur when AC power is applied to the Drive, the use of slow-blow fuses is recommended. As an alternative to fuses, an MCB or MCCB may be used if equipped with adjustable thermal and magnetic trip devices of a suitable rating.

4.5 Ground connections

The impedance of the ground circuit must conform to the requirements of Health and Safety Regulations that may apply.

The size of external grounding terminals should be appropriate to the size of the grounding cables.

Ground connections on the power input and power output connectors are connected together in the Drive, enabling the following connections to be made through the Drive:

Motor frame ground to system ground

Motor frame ground to the machine ground

The Drives are suitable for grounded-delta installation without alteration.

4.6 DC bus choke

For model size 3, connect the specified DC bus choke to terminals L11 and L12 of the Drive.

An external DC bus choke is not required for model sizes 1 and 2.

4.7 Connecting an external braking resistor

Warning

Electric shock risk

When an external braking resistor is connected, adjustments must be made to the Drive that modify its operation. Make a note on the front of the Drive stating that a modification has been made in order to reduce the risk of a modified Drive being mistaken for a standard Drive.

When an AC motor is decelerated, energy is returned to the Drive from the motor. When a high inertia load is decelerated in a short time, the energy delivered can be too great for the Drive to absorb. The effect is to increase the voltage of the DC bus, with the possibility of the Drive tripping due to overvoltage on the DC bus.

An external DC braking resistor can be connected to the Drive. When the DC bus voltage exceeds a pre-determined level, the resistor is connected to the DC bus by a transistor in order to absorb the excessive energy.

The maximum required braking torque determines the required resistor value. The duty cycle, repetition time and cooling available for the resistor determine the required power rating of the resistor.

A lock-out feature ensures that the braking transistor cannot be turned on when a short-circuit condition exists. In the event of a lock-out, the AC supply must be disconnected and the condition investigated before the Drive is restarted.

It is strongly recommended that a thermal trip is included to trip the AC supply isolator in order to protect the braking resistor if it becomes over-heated.

The maximum DC bus voltage is 750V. The external braking resistor, connecting cables and insulation must be suitable for this operating voltage.

Position the external resistor so that heat generated by it cannot affect the Drive.

Refer to Figure 4–7 for connections for the different models.

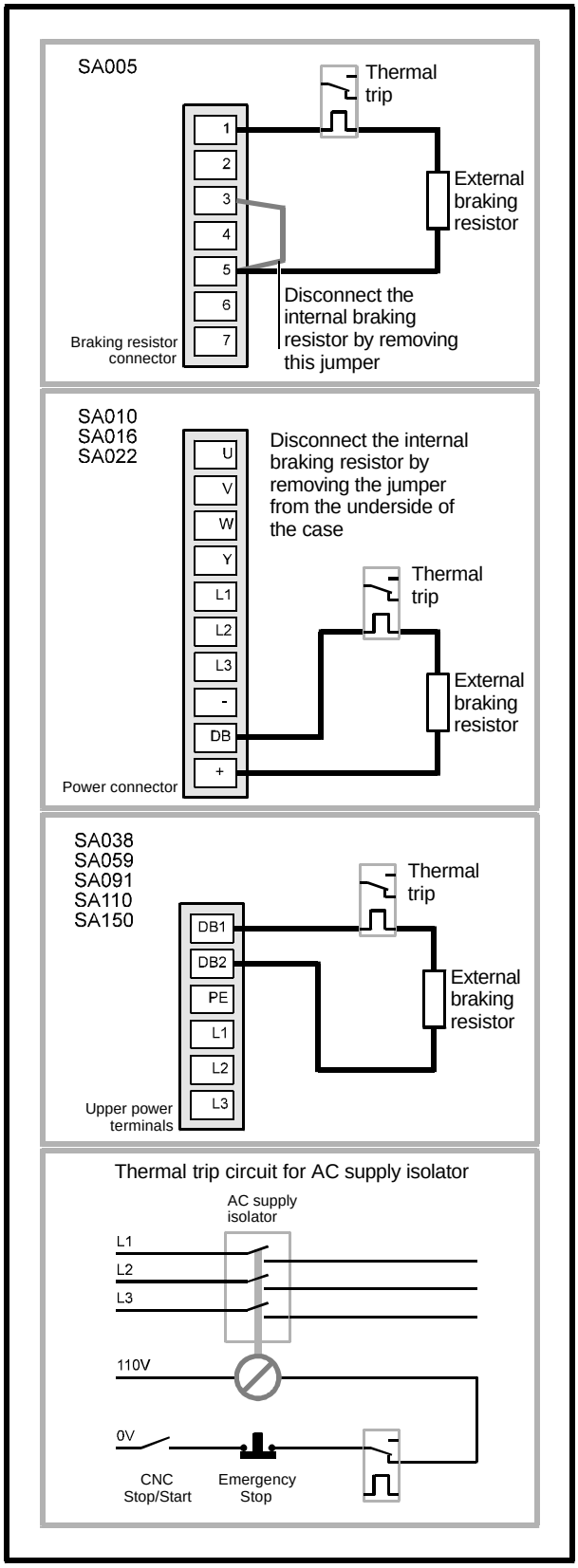

Figure 4–7 Braking resistor and thermal trip connections

Disconnecting the internal braking resistor

Models SA005, SA010, SA016, SA022

When an external braking resistor is used, the internal resistor(s) **must be disconnected**. On the underside of the case is access to a removable jumper. Grip the visible part of the jumper with long-nose pliers and remove the jumper.

4.8 Calculating the braking resistor value

Refer to the following for guidance in selecting a braking resistor. If the internal resistor is inadequate, install an external braking resistor and disconnect the internal resistor. In case of uncertainty, refer to the supplier of the Drive.

The required value and rating of the braking resistor are calculated for the following:

Amount of energy to be absorbed
Rate at which the energy (power) is to be absorbed
Time lapse between successive decelerations

The kinetic energy of the motor and the driven machine is as follow:

$$\varepsilon = 0.5J\varpi^2$$

where:

J = Total moment of inertia (kg.m^2) of the motor and driven machine. If there is gearing between the motor and the driven machine, **J** is the value produced at the motor shaft.

$$\varpi = \text{Angular velocity} = \frac{2\pi n}{60}\ \text{rads/sec}$$

n = motor speed in RPM

Since the energy is proportional to ω^2, most of the energy in the system is concentrated at the higher operating speeds.

The braking resistor should be capable of tolerating thermal shock. *Pulse rated* resistors are recommended.

Example

To calculate the required value and power rating for a braking resistor to decelerate the motor from maximum speed to rest. The conditions are as follows:

Drive rating = 30 kW
Motor rating = 30 kW
Full-load speed of motor (**n**) = 1475 RPM
Nominal torque rating of motor (**a**) = 194 Nm
Repeat cycle time = 30 seconds
System inertia (**J**) = 10 kg.m^2
Resistor operating voltage = 750V

Calculating the minimum permissible deceleration time

Use the following equation to calculate the minimum deceleration time t_b for the maximum possible braking torque M_{bmax}.

$$M_{b\,max} = Ja = J\frac{\varpi}{t_b} = J\frac{2\pi n}{60t_b}$$

$$t_b = \frac{J\pi n}{30M_{b\,max}}$$

where:

J = System inertia
a = Nominal torque rating of motor
t_b = Deceleration time
n = Full-load speed of motor

Maximum deceleration corresponds to 150% of the nominal torque of the motor. The value of M_{bmax} is then as follows:

$$1.5 \times 194 = 291$$

The *minimum permissible* deceleration time t_b is as follows:

$$t_b = \frac{10 \times \pi \times 1475}{30 \times 291} = 5.31\text{sec s}$$

Note

This value is the minimum deceleration time that can be achieved for the stated conditions.

Using a practical deceleration time

A *practical* deceleration time t_d can now be decided. The actual braking torque M_b required to decelerate the load in 7 seconds is calculated as follows:

$$M_b = J\frac{\pi n}{30t_d} = \frac{10 \times \pi \times 1475}{30 \times 7} = 221\text{Nm}$$

Calculating the resistor power rating

The power dissipated in the braking resistor is as follows:

$$P_b = M_b\frac{\pi n}{30 \times 10^3} = \frac{221 \times \pi \times 1475}{30 \times 10^3} = 34.1\text{kW}$$

Since braking occurs intermittently, the resistor can be rated for *intermittent* rather than *continuous* power dissipation. When the intermittent rating is used, the overload factor of the resistor can be used. This factor is derived from *cooling curves* in the resistor data. A typical overload factor is 2.

For deceleration time of 7 seconds and repeat cycle time of 30 seconds, the power rating of the braking resistor can be reduced to the following value:

$$P_r = \frac{P_b}{[\text{Overload factor}]} = \frac{34.1}{2} = 17.1\text{kW}$$

For practical purposes, it can be assumed that 15% to 20% of braking energy is dissipated as follows:

Electrical dissipation in the motor
Electrical dissipation in the Drive
Mechanical losses in the motor and the driven load

The Drive is capable of accepting regeneration current of a value up to 150% of its full load current rating for a period up to 60 seconds (eg. 150% x 30kW = 45 kW). The braking power cannot exceed this power capability of the Drive.

Calculating the resistor value

The maximum value of braking resistor is as follows:

$$R = \frac{V^2}{P_b} = \frac{750^2}{34.1 \times 10^3} = 16.5\Omega$$

In practice, a slightly lower value should be used for the following reasons:

When the duty ratio of the braking transistor is close to 100%, the Drive does not have full control over the DC bus voltage. A lower value of braking resistor will cause more power to be dissipated in a given period of time, allowing the duty ratio to be reduced.

When the required value is not a preferred resistor value, use a resistor having a value close to and lower than the calculated value.

Internal braking resistor ????

The capability of the internal braking resistor is as follows:

Model	Maximum duty cycle for internal braking resistor	Value of internal resistor	Minimum value of external resistor
SA005	1.5kW for 10 secs braking time with 90 secs minimum cooling time.	80Ω	80Ω
SA010	1.5kW for 10 secs braking time with 90 secs minimum cooling time.	????	33Ω
SA016 SA022	3.0kW for 10 secs braking time with 90 secs minimum cooling time.	40Ω	17Ω
SA038 SA059	No internal braking resistor fitted		11Ω
SA091 SA110 SA150	No internal braking resistor fitted		6Ω

4.9 Control Keypad connections

Model size 3

Use screened cable when connecting to a remotely mounted Control Keypad. Connect the cable screen to an external ground terminal which should be as close to the Control Keypad as possible.

The connecting cable should be shielded data cable having a maximum length of 100m (330ft). For lengths of less than 1 metre (3 feet), unscreened twisted-pair wiring may be used. The Control Keypad connector is a 9-pin D-type socket.

Model sizes 1 and 2

The Control Keypad cannot be mounted remotely.

4.10 Signal connections

Note

In the connection diagrams, the programmable inputs and outputs are shown in their default configurations.

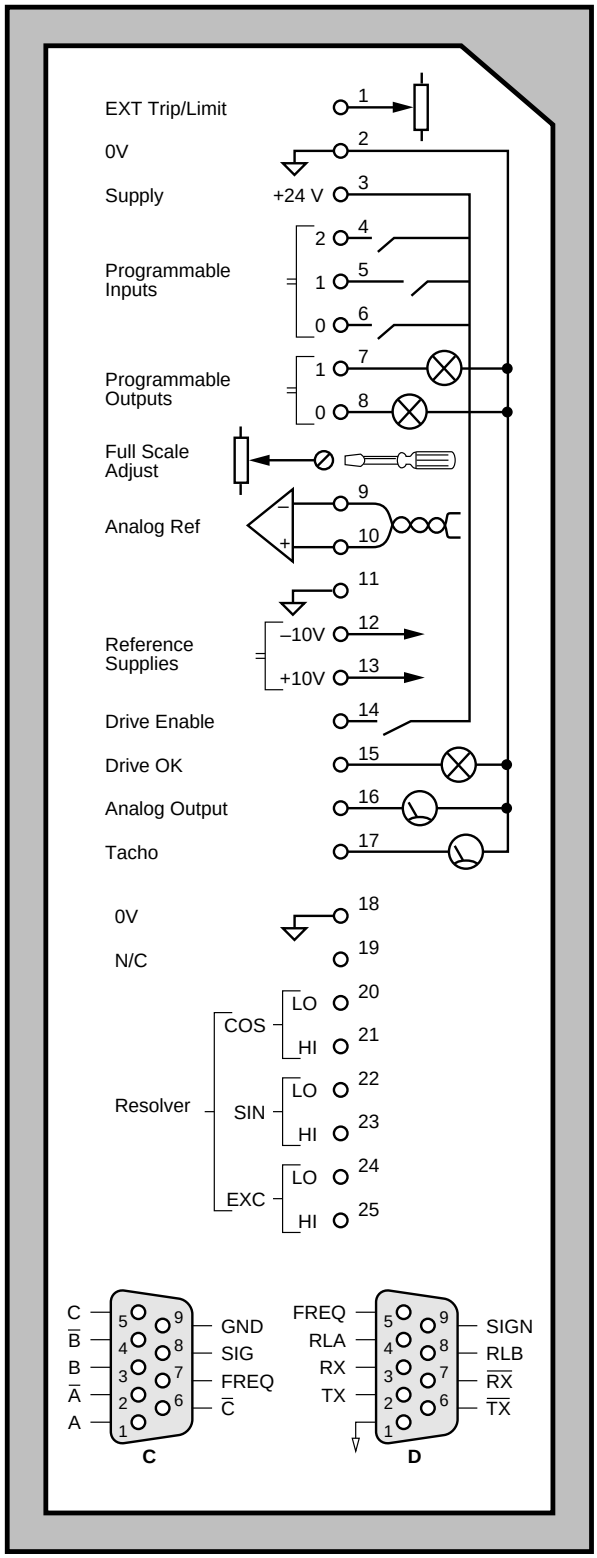

Figure 4–8 Models SA005, SA010, SA016, SA022
Legend printed on the front panel showing locations of the control signal connectors

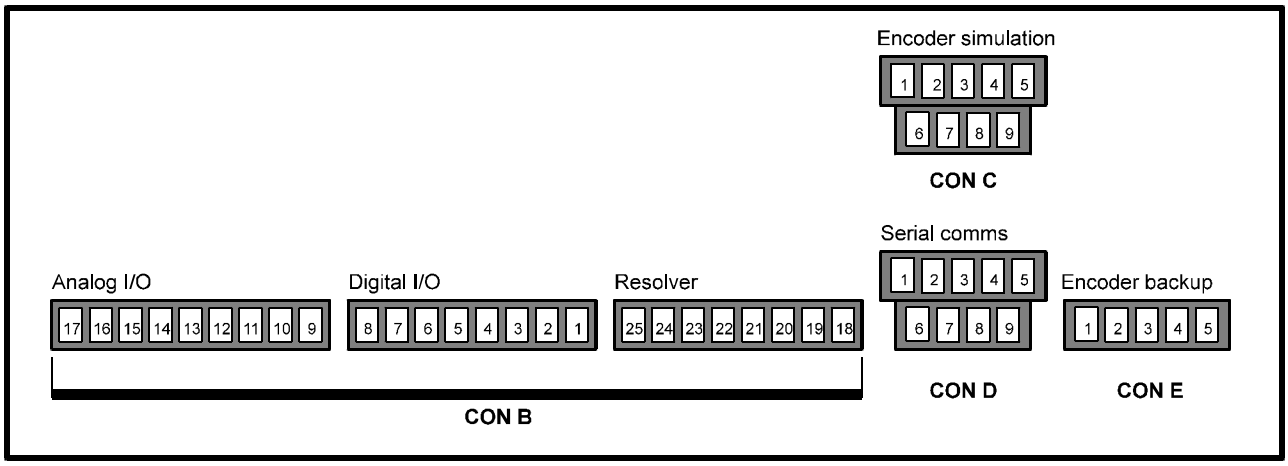

Figure 4–9 Models SA038, SA059, SA091, SA110, SA150 Layout of the control signal connectors on the front panel

CON B – Digital I/O connections

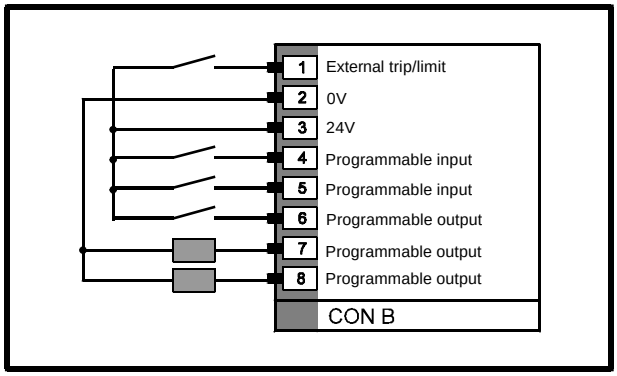

Figure 4–10 Digital I/O connections

Pin	Function	Type	Description
B1	External trip / External current limit	In	When parameter **b56** is set at 0, a signal applied to this input sets the torque limit. When parameter **b56** is set at 1, this input is used as an external trip input. For example, the input can be connected to a PTC motor thermistor as shown below. 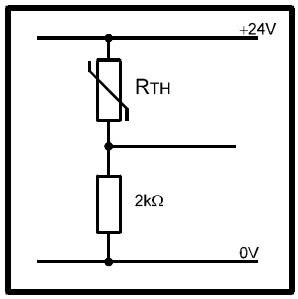 Note — The 2kΩ resistor value shown applies to **Dutymax** servomotors. For other motors, the resistor value should be selected so that the input signal at terminal B1 is less than 5V at the motor trip temperature.
B2	0V		Control signal common
B3	+24V, 100mA	Out	Power supply to external control circuits.
B4	Programmable input 2	In	When parameter **b16** = 0, and **Pr21** = 2, these inputs are used for digital speed selection. The configuration can be read in parameter **Pr18**.
B5	Programmable input 1	In	When **b16** = 1, these inputs are used for limit switch signals. Input impedance: 15kΩ

B4	B5	When b16 = 0 Selects digital speed reference parameter	When b16 = 1 Limit switch inputs
Open-cct	Open-cct	Pr0	Inhibits rotation in both directions
Open-cct	+24V	Pr1	Inhibits reverse (anti-clockwise) rotation
+24V	Open-cct	Pr2	Inhibits forward (clockwise) roatation
+24V	+24V	Pr3	Allows rotation in either direction

Logic 0: <4.5V or open-circuit
Logic 1: >5.5V

Pin	Function	Type	Description
B6	Programmable input 0	In	The function of this input is selected using **b18**, **b53** and **Pr27** as follows: Zero speed Hold Shaft orientation input. Input impedance: 15kΩ

b18	Signal applied to B6	Function
0	Open-circuit	Not stop
1	Any signal level	Stop
X	+24V	Stop

Pin	Function	Type	Description
B7	Programmable output 1	Out	Refer to **Pr30** Open-collector output (PNP), 60mA max.
B8	Programmable output 0	Out	Refer to **Pr31** Open collector output (PNP), 60mA max.

CON B – Analog I/O connections

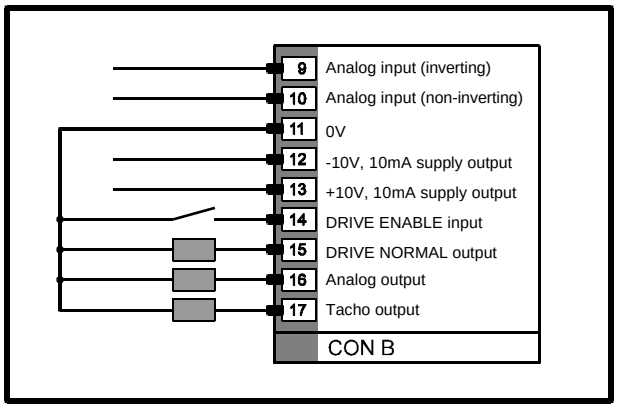

Figure 4–11 Analog inputs and outputs

Pin	Function	Type	Description
B9	Analog inverting input	In	When **b6** = 0, these inputs are used as analog speed reference
B10	Analog non-inverting input	In	When **b6** = 1, these inputs are used as torque reference input Input Impedance: 10kΩ
B11	0V		Control signal common
B12	–10V (10mA)	Out	Voltage reference
B13	+10V (10mA)	Out	Voltage reference
B14	Drive enable	In	Apply +6V to +24V to pin B14, and set parameter **b2** at 1, to enable the Drive.
B15	Drive Normal	Out	Logic output to indicate the Drive is operating normally. Normal state is indicated by: +24V output on B15 **b33** = 1
B16	Programmable analog output	Out	Refer to **b12** and **b13**
B17	Tacho-generator output	Out	

CON B – Resolver connections

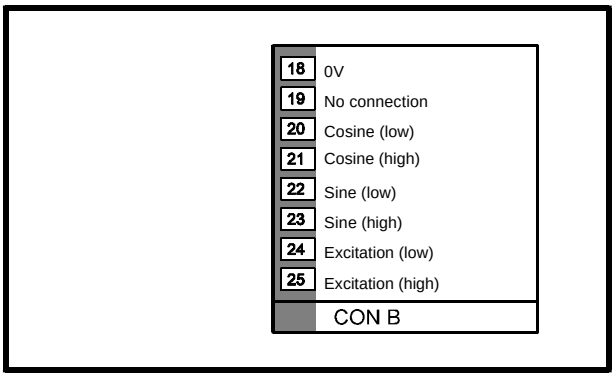

Figure 4–12 Resolver connections

Pin	Function	Type	Description
B18	0V		Ground connection for the resolver wiring screen
B19	Not internally connected		Do not connect
B20	Cosine low	In	Cosine signal from resolver
B21	Cosine high	In	
B22	Sine low	In	Sine signal from resolver
B23	Sine high	In	
B24	Excitation low	Out	
B25	Excitation high	Out	Signal at 7.812 kHz for resolver

CON C – Simulated Encoder connections

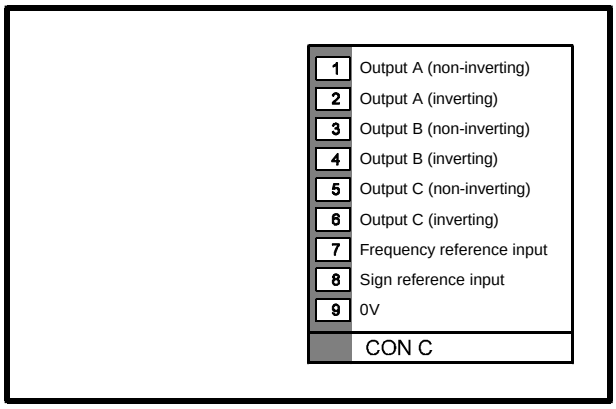

Figure 4–13 Simulated Encoder connections

Pin	Function	Type	Description
C1	A	Out	Simulated encoder, channel A non-inverting output
C2	$\overline{A}$	Out	Simulated encoder, channel A inverting output
C3	B	Out	Simulated encoder, channel B non-inverting output
C4	$\overline{B}$	Out	Simulated encoder, channel B inverting output
C5	C	Out	Simulated encoder, channel C non-inverting output
C6	$\overline{C}$	Out	Simulated encoder, channel C inverting output
C7	Frequency reference input	In	When parameters **b14** = 0 and **b17** = 0, the frequency of a signal applied to this input controls the motor speed. Scale: 2048 pulses = 1revolution
C8	Sign reference input	In	Used in conjunction with terminal C7 to indicate the required direction of rotation of the motor (See parameter **b15**)
C9	0V		

CON D – Serial Communications connections

The serial communications connector is a 9-way D-type. Full duplex RS485 connections require two shielded twisted-pair wires.

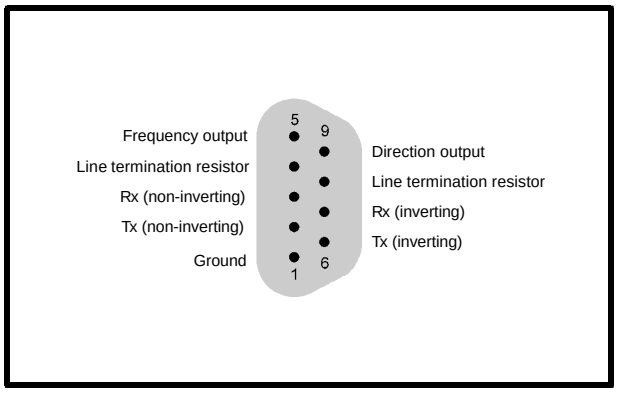

Figure 4–14 Serial Communications connections

Pin	Function	Type	Description
D1	GND		0V
D2	TX	Out	Transmit signal, non-inverted
D3	RX	In	Receive signal, non-inverted
D4	RLA		Network termination resistor
D5	FREQOUT	Out	Frequency output (102.4kHz = 6000 RPM)
D6	$\overline{TX}$	Out	Transmit signal, inverted
D7	$\overline{RX}$	In	Receive signal, inverted
D8	RLB		Network termination resistor
D9	DIROUT	Out	Direction output

CON E – Back-up supply connector

For applications that require serial communications or information on rotor shaft position to be maintained when AC power is lost from the Drive, an external power supply can be connected to connector E which is on the underside of the Drive. This is used to maintain the supplies to the control circuits in the Drive. When AC power is lost, the display on the Drive shows the decimal point moving from left to right. (The serial communications port is not active when the Drive is in this state.)

Pin	Supply
1	+8V
2	+24V
3	0V
4	–24V
5	0V