3 Mechanical Installation

Warning

The equipment enclosure is rated at IP20 in accordance with IEC539. It is designed for installation within a protective enclosure which prevents unauthorised access except for trained service personnel, and prevents contamination with conductive dust and condensation.

3.1 EMC wiring recommendations

To minimize radio-frequency emissions, it is necessary to install the Drive in a steel enclosure and pay attention to the arrangement of the wiring inside the enclosure. Figure 3–1 shows recommendations for the layout of the enclosure. Figures 4–4, 4–5 and 4–6 in Chapter 4 *Electrical Installation* show examples of wiring arrangements for minimum radio-frequency emissions. The actual arrangement used will have to be adapted to individual requirements.

When planning the installation, refer to Chapter 4 in addition to this chapter.

The essential requirements are as follows:

RFI filter

- Mount an RFI filter above the Drive at a distance of 125mm (5 in).
- Make the AC power cables from the RFI filter to the Drive as short as possible.
- Use a flat conductor at least 10mm ($^1/_2$in) wide and as short as possible to make the ground connection from the RFI filter to the Drive.

Motor cable

- Use armoured or shielded cable to connect the motor to the Drive. Connect the armour or shield to the Drive and to the motor frame. Make these connections no longer than 50mm (2in).
- If the length of cable used to connect the motor to the Drive exceeds 50m (150 feet), output chokes may be required in order to prevent cable capacitance effects causing over-current trips (**OC**) in the Drive. For difficult cases, consult the supplier of the Drive.

Resolver wiring
Simulated-encoder wiring

- Signal connections from the resolver and from the simulated encoder input of the CNC controller must be connected to the Drive using cable consisting of three twisted-pairs of wire. Each twisted pair must be screened, and the cable must have an overall screen. Connect the screens of the resolver cable only to terminal B18 of the Drive. Connect the screens of the simulated encoder output only to the CNC controller ground terminal.
- When a motor thermistor is to be used, connect it to the Drive using a fourth twisted-pair in the screened cable to the resolver. Connect the screen for this twisted-pair only to terminal B18 on the Drive.

Analog speed reference wiring

- Use shielded twisted-pair cable to connect the analog speed reference to the Drive. It is strongly recommended that a true differential signal source is used in order to maximize immunity to electrical noise. Connect the cable shield only to the ground connection of the CNC controller.
- A single-ended signal source may be used, but electrical noise immunity is reduced. Use shielded twisted-pair cable. Apply the signal to terminal B9 or B10 of the Drive, as required. Connect the 0V common to terminal B11. Connect the unused differential input (terminal B10 or B9) to terminal B11.

Ground connections

- Bus-bars must be used to make certain ground connections, as shown in Figure 4–4. These bus-bars must be made of copper bar of the dimensions shown.

Ferrite absorber ring

- When a number of Drives are installed in an enclosure, it is recommended that a ferrite absorber ring is fitted over the AC supply cables to each Drive. (See also *Capacitor network*.)
- Part number: 4200-3608

Capacitor network

- When three or more Drives are installed in an enclosure, a capacitor network may be required. Refer to Figure 4–4. Connect a 0.47µF 500VAC capacitor between each AC supply phase and ground.

3.2 Planning the installation

The following conditions must be met when planning the installation of the Drive or a number of Drives in an enclosure:

- The environment is acceptable
- The maximum permissible ambient temperature is not exceeded
- The EMC requirements are met
- The electrical installation meets safety requirements
- The size of the installation does not exceed the space available

Use the following procedure:

1. Decide how the Drives are to be mounted in the enclosure, as follows:

- Surface-mounted
- Through-panel mounted

Surface mounting gives the following:

Better ingress protection

Heat dissipated inside the enclosure

Through-panel mounting gives the following:

Heat dissipated outside the enclosure

Reduced ingress protection

2. Refer to Figure 3–1 to plan the layout of the equipment in the enclosure.

3. If the Drives are to be surface mounted in the enclosure, refer to either of the following:

If the enclosure is to be sealed, perform the calculations in *Heat dissipation in a sealed enclosure* in order to determine the minimum permissible size of enclosure for heat dissipation.

If the enclosure is to be ventilated, perform the calculation in *Heat dissipation in a ventilated enclosure* in order to determine the required volume of air-flow.

4. If necessary, adjust the size of the enclosure, and re-plan the internal equipment accordingly. Repeat instructions **2** to **4** as many times as required to meet all the requirements.

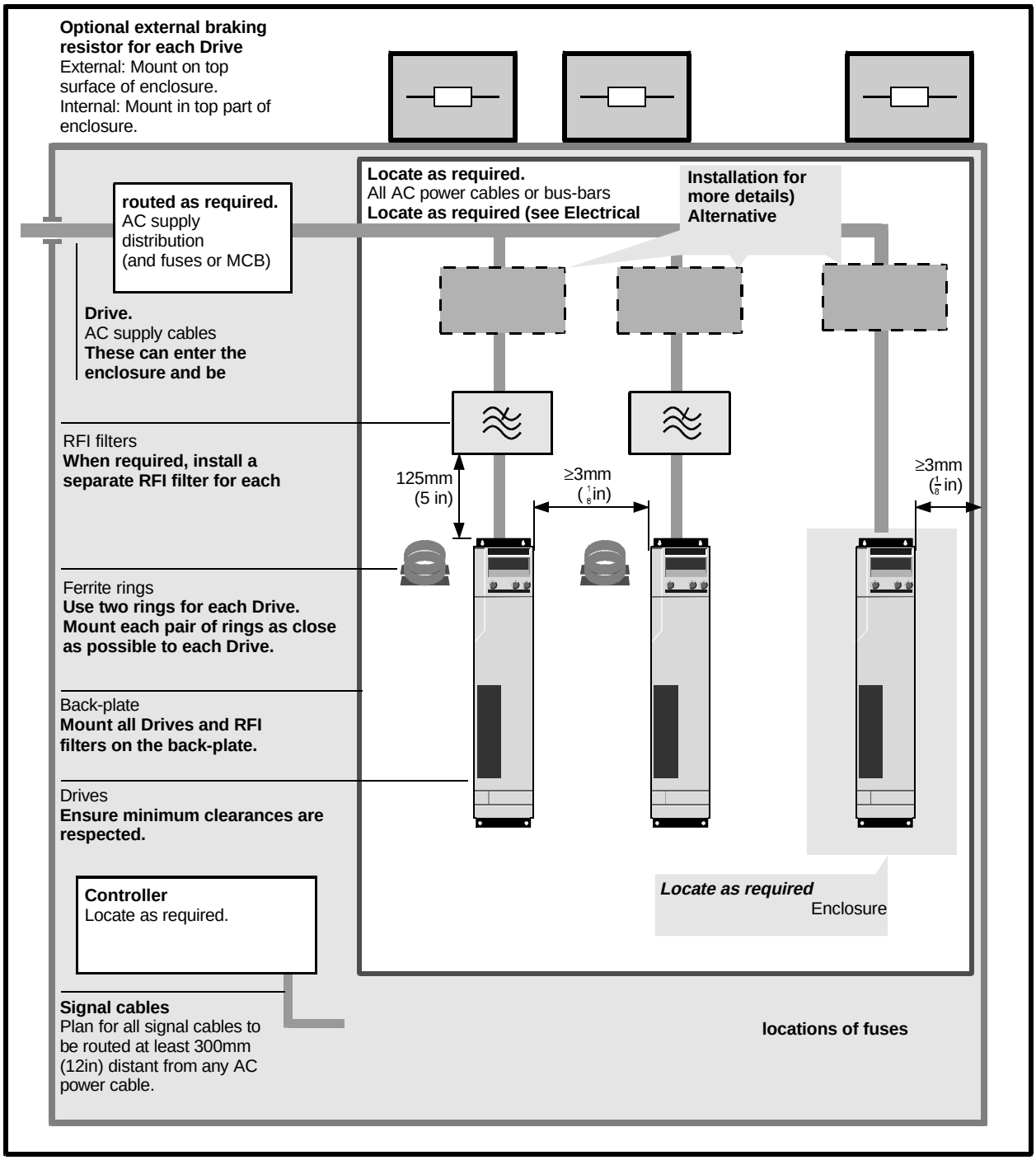

Figure 3–1 Planning the layout of the enclosure

3.3 Environment

1. In accordance with the IP20 rating of the Drive, the Drive must be located in an environment that is free from dust, corrosive vapours, gases and all liquids, including condensation of atmospheric moisture.
2. If condensation is likely to occur when the Drive is not in use, install an anti-condensation heater. This heater must be switched off when the Drive is in use; automatic switching is recommended.
3. Do not locate the Drive in a classified hazardous area, unless the Drive is installed in an approved enclosure and the installation is approved.
4. Install the Drive vertically for best flow of cooling air.
5. Install the Drive as low as possible in the enclosure without contravening EMC requirements.
6. Observe the requirements for ambient temperature if the Drive is to be mounted directly above any heat generating equipment, such as another Drive.
7. If the Drive is to be installed directly beneath other equipment, such as another Drive, ensure the Drive does not cause the ambient temperature requirements of the equipment to be exceeded.
8. Allow at least 100mm (4in) clearance above and below the Drive.
9. Allow at least 3mm ($^{1}/_{8}$in) clearance each side of the Drive.

3.4 RFI filters ????

Install the RFI filter specified for the Drive model as follows. Use one RFI filter for each Drive. (Ferrite absorber rings and a capacitor network can be used in place of an RFI filter. See *Ferrite absorber rings* below.) ????

Drive model	Filter part number
SA005	4200–4810 ???
SA010	4200–4810
SA016	4200–4810
SA022	4200–4820
SA038	4200–4820
SA059	4200–4830
SA091	4200–1051
SA110	4200–1051
SA150	????

Filter part number	Filter dimensions					
	Length		Width		Depth	
4200–	mm	in	mm	in	mm	in
4810	250	$9^{15}/_{16}$	110	$4^{3}/_{8}$	60	$2^{3}/_{8}$
4820	270	$10^{3}/_{4}$	140	$5^{9}/_{16}$	60	$2^{3}/_{8}$
4830	270	$10^{3}/_{4}$	140	$5^{9}/_{16}$	60	$2^{3}/_{8}$
1051	330	13	190	$7^{5}/_{8}$	145	$5^{11}/_{16}$

3.5 Ferrite absorber ring ????

A ferrite absorber ring and capacitor network may be used in place of an RFI filter for all models, except for models ???? and ?????. See Figure 4–4.

3.6 Ferrite rings

The three conductors of the motor cable from each Drive must pass twice through two ferrite rings, as shown in Figures 4–5 and 4–6.

Part number: 4200-0000

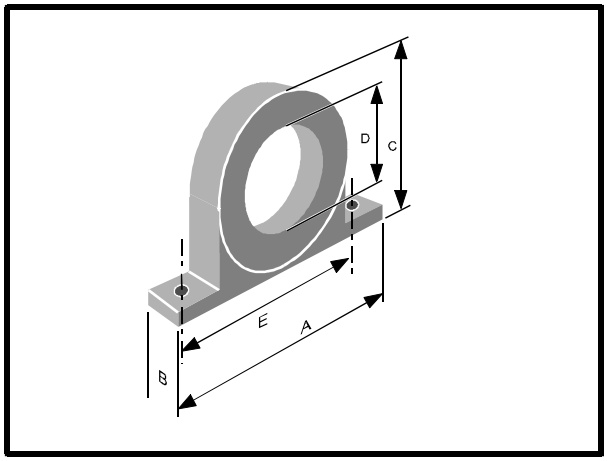

Dimension	mm	in
A	105	$4^{3}/_{16}$
B	24	1
C	62	$2^{1}/_{2}$
D	28.5	$1^{1}/_{8}$
E	90	$3^{5}/_{8}$
Mounting hole diameter	5	$^{3}/_{16}$

Figure 3–2 Dimensions of the ferrite rings

3.7 Control Keypad

The Control Keypad on the bookcase drives (sizes 1 and 2) cannot be located away from the drive.

For model size 3, the Control Keypad is a plug-in unit which can be detached from the Drive for mounting in a panel. Holes are required in the panel for the fixing studs and connector which project from the rear of the Control Keypad housing. Refer to Figure 3–3.

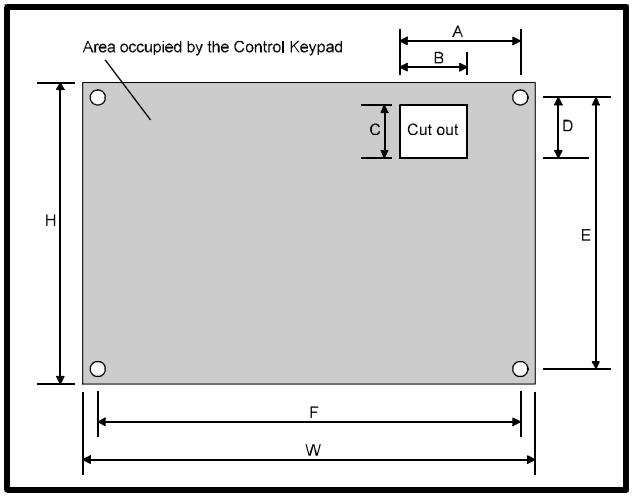

Dimension	mm	in
A	65.0	$2^{9}/_{16}$
B	40.0	$1^{9}/_{16}$
C	26.0	$1^{1}/_{16}$
D	22.0	$^{7}/_{8}$
E	97.0	$3^{13}/_{16}$
F	146.5	$5^{3}/_{4}$
H	167	$6^{9}/_{16}$
W	114	$4^{1}/_{2}$
Mounting hole diameter	M4	$^{3}/_{16}$

Figure 3–3 Mounting screw holes and dimensions of cut-out required for remote mounting of the Control Keypad

The Control Keypad on model sizes 1 and 2 cannot be located remotely from the Drive.

3.8 Mounting a DC bus choke

For model size 3, an external DC bus choke is required. The choke may be mounted in the same enclosure as the Drive.

No external DC bus choke is required for model sizes 1 and 2.

Note

Drives supplied in a NEMA 1 case contain the DC bus choke.

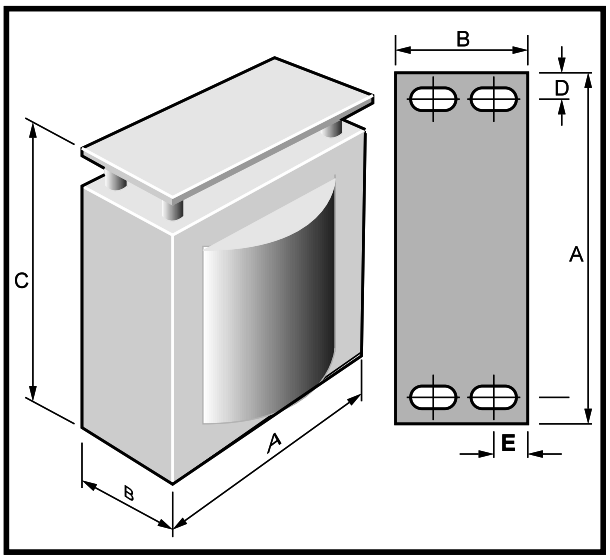

Value	A	B	C	D	E	Terminal size
mH	mm in	mm in	mm in	mm in	mm in	
1.50	137 $5^{7}/_{16}$	84 $3^{5}/_{16}$	175 $6^{7}/_{8}$	24 $^{15}/_{16}$	10 $^{3}/_{8}$	M8
0.70	137 $5^{7}/_{16}$	116 $4^{9}/_{16}$	175 $67/_{8}$	24 $^{15}/_{16}$	10 $^{3}/_{8}$	M8
0.45	167 $6^{5}/_{8}$	119 $4^{11}/_{16}$	197 $7^{3}/_{4}$	39 $1^{9}/_{16}$	8 $^{5}/_{16}$	M8
0.50	195 $7^{11}/_{16}$	138 $5^{7}/_{16}$	230 $9^{1}/_{16}$	46 $1^{13}/_{16}$	11 $^{7}/_{16}$	M10
0.40	215 $8^{7}/_{16}$	166 $6^{9}/_{16}$	254 10	51 $2^{12}/_{16}$	13 $^{1}/_{2}$	M10

Figure 3–4 Dimensions of the DC bus choke

3.9 Heat dissipation in a sealed enclosure

To maintain sufficient cooling of the Drive when it is installed inside a sealed enclosure, heat generated by all the equipment in the enclosure must be taken into account and the enclosure must be of adequate size. To calculate the minimum acceptable size of enclosure, use the following procedure.

Calculate the minimum required surface area $\mathbf{A_e}$ for the enclosure from:

$$A_e = \frac{P}{k(T_i - T_{amb})}$$

where:

- $\mathbf{A_e}$ = Unobstructed heat-conducting area in m^2
- $\mathbf{k}$ = Heat Transmission coefficient of the enclosure material in Watts/m^2/°C
- $\mathbf{T_i}$ = Maximum permissible operating temperature in °C of the Drive
- $\mathbf{T_{amb}}$ = Maximum external ambient temperature in °C
- $\mathbf{P}$ = Power in Watts dissipated by all heat sources in the enclosure

Example

To calculate the size of an enclosure for one SA038 Drive. The following conditions are assumed:

- The installation is to conform to IP54, requiring the Drive to be surface-mounted within a sealed enclosure
- Only the top, front and two sides of the enclosure are free to dissipate heat
- The enclosure is made of painted 2mm ($^{3}/_{32}$ inch) sheet steel
- Maximum external ambient temperature: 25°C (77°F)
- Drive PWM frequency: 6kHz

Insert the following values:

- $\mathbf{P}$ = 674W (from Losses and Efficiency table)
- $\mathbf{T_i}$ = 50°C (122°F)
- $\mathbf{T_{amb}}$ = 25°C (77°F)
- $\mathbf{k}$ = 5.5 (typical value for painted 2mm ($^{1}/_{16}$ inch) sheet steel)

The minimum required heat conducting area is then:

$$A_e = \frac{674}{5.5(50-25)} = 4.9\text{m}$$

The unobstructed heat-conducting area of the enclosure is:

$$A_e = 2HD + HW + DW$$

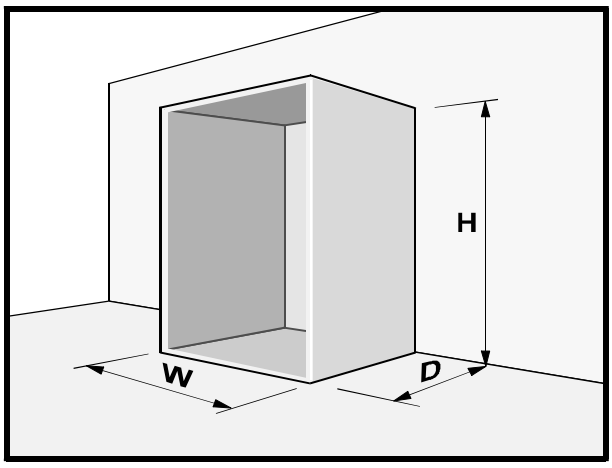

Figure 3–5 Enclosure having top, sides and front surfaces free to dissipate heat

Estimate two of the enclosure dimensions — the height and depth, for instance. Calculate the minimum width from:

$$W = \frac{A_e - 2HD}{H + D}$$

Inserting H = 1.8 metres, D = 0.5 metre, obtain the minimum width:

$$W = \frac{3.2 - (2 \times 1.8 \times 0.5}{1.8 + 0.5} = 0.6 \quad \text{metres approx}$$

If possible, locate heat-generating equipment in the lower part of the enclosure to encourage internal convection. Otherwise, increase the height of the enclosure or install 'stirrer' fans.

3.10 Heat dissipation in a ventilated enclosure

If a high ingress factor is not required, a ventilated enclosure may be used. This will be smaller than a sealed enclosure.

To calculate the minimum required volume of ventilating air, use the following formula:

$$V = \frac{3.1 \times P}{T_i - T_{amb}}$$

where:

V =	Air-flow in m^3/hr
P =	Power in Watts dissipated by all heat sources in the enclosure
T_i =	Maximum permissible operating temperature in °C of the Drive
T_{amb} =	Maximum external ambient temperature in °C

Example

To calculate the ventilation requirement for one SA038 Drive:

P =	674W
T_i =	50°C
T_{amb} =	25°C

Then...

$$V = \frac{3.1 \times 674}{50 - 25} = 94.7\text{m}^3 / \text{hr}$$

3.11 Motor cooling

When a motor is driven at low speed, its internal cooling fan becomes less effective. If necessary, provide it with additional cooling (such as forced ventilation).