9 Getting Started

9.1 Setting parameter values

For the Drive to operate correctly with a motor, appropriate values must be given to certain parameters. Follow the instructions in this chapter to enter values for these parameters in order to get the motor and Drive running. Adjustments can be made later to optimize the system.

The following parameters may be left initially in their default state:

Speed reference	Analog ±10V (**b17** = 0)
Acceleration and deceleration ramps	Disabled (**b7** = 0)
Software enable	Enabled (**b2** = 1)
Limit switch	Disabled
Analog output **B16**	Indicates clamped current demand (**b12** = 0, **b13** = 0)
Analog output **B17**	Indicates simulated tacho-generator signal
Digital output **B7**	Configured for I^2t limitation (**Pr30** = 0)
Digital output **B8**	Configured for temperature pre-alarm (**Pr31** = 1)
PID parameters **Pr13, Pr14, Pr15**	Set at typical values

9.2 Motor parameters

Caution

The values of the following parameters affect the protection of the motor and the safety of the system.

- **Pr28** Motor magnetizing current
- **Pr29** Motor full load slip
- **Pr32** Motor base speed
- **Pr42** Motor maximum current
- **Pr45** Motor full load current
- **Pr95** Number of motor poles

To set-up the motor parameters, set b2 at 0. Make sure the values assigned to these parameters are relevant to the motor that is to be used. The default values should not be relied upon.

Keep a note of the values given to the motor parameters, since motor parameters are restored to their default values when parameter b5 is set at 1.

After restoring parameters to their default values, and before starting the Drive, re-enter the appropriate values of the motor parameters.

Note

The motor parameters should be set to within 10% of the required values for the motor. Failure to do this may result in poor response.

Example

A 15kW motor with the following data on the motor rating plate is to be controlled using Drive model SA038. The application requires a maximum of 150% overload.

Full load current = 30A
cosϕ = 0.87
Rated speed = 1455 RPM
Frequency = 50Hz
Required Drive peak current = 57A

Pr45 — Nominal current

From the motor rating plate obtain the value of the full load current (I_{nom}). (This is the vector sum of the magnetizing current and the active (torque-producing) current.) The full load current is the maximum current that the motor can draw continuously without being damaged.

Refer to Chapter 2 *Data* for the value of peak current I_{pk} of the Drive.

Use the following equation to calculate the required value for **Pr45**:

$$Pr45 = \frac{I_{nom}}{I_{pk}} \times 100$$

$$Pr45 = \frac{30}{57} \times 100 = 52.6$$

Enter the value 53 in **Pr45**.

Pr28 — Motor magnetizing current

Obtain the magnetizing current (I_{mag}) of the motor from the manufacturer. Alternatively, obtain its value by measuring the current drawn at no load.

When measuring the current, disconnect the motor spindle from any load, and apply the voltage and frequency stated on the motor rating plate.

A third (less accurate) method of obtaining the magnetizing current is to calculate the following:

$$I_{mag} = I_{nom} \times \sqrt{\left(1 - \cos^2 \phi\right)}$$

where ϕ is the power factor of the motor.

$$I_{mag} = 30 \times \sqrt{1 - \cos^2 0.87} = 14.8A$$

If an incorrect value is entered, the motor will either be over-excited (wasting energy), or under-excited (full torque will not be produced).

Refer to Chapter 2 *Data* for the value of peak current I_{pk} of the Drive.

Use the following equation to calculate the required value for **Pr28**:

$$Pr28 = \frac{I_{mag}}{I_{pk}} \times 100$$

$$Pr28 = \frac{14.8}{57} \times 100 = 26.0A$$

Enter the value 26 in **Pr28**.

Pr32 — Motor base speed

Motor base speed is the speed at which rated voltage is applied by the Drive to the motor.

Use the following equation to calculate the required value for **Pr32**:

$$Pr32 = \frac{\left(V_{supply} - 20\right) \times \text{Base speed in RPM}}{V_{motor}}$$

where:

V_{supply} = AC supply voltage
V_{motor} = Rated voltage of the motor

$$Pr32 = \frac{(415 - 20) \times 1455}{415} = 1385RPM$$

Enter thevalue 1385 in **Pr32**.

Pr29 — Full-load slip

Obtain the value of the full-load slip from the motor rating plate. Alternatively, obtain the value by measuring the motor speed at no-load and full-load.

Enter full-load slip as a value of RPM, as follows:

$$Pr29 = N_O - N_R$$

where:

N_o = Motor speed in RPM at no load

N_R = motor speed in RPM at full load

$$Pr29 = 1500 - 1455 = 45RPM$$

Enter the value 45 in **Pr29**.

Pr95 — Number of motor poles

Enter 2, 4 or 8 in **Pr95** according to the construction of the motor. (Default setting: 4)

If this parameter is changed, the following procedure must be performed to make the change take effect:

1. Save the parameter values (by setting **b99** at 1).
2. Remove AC power from the Drive.
3. Wait 10 seconds, then re-apply AC power to the Drive.

9.3 Protection parameters

Pr42 — Maximum current

It is common in spindle applications for the motor to be required to tolerate a short-term current I_{max} in excess of the continuous full-load current, I_{nom}.

The value of I_{max} may be lower than the rated maximum current of the Drive, I_{pk}. **Pr42** can then be used to limit the maximum current that can be delivered by the Drive so that I_{max} for the motor is not exceeded.

Calculate the following:

$$Pr42 = \frac{I_{max}}{I_{pk}} \times 100$$

where:

I_{pk} = Rated current of the Drive
I_{max} = Maximum motor current

When 150% overload is required, the maximum current must be equal to 150% of the nominal current, (ie. I_{max} = 45A).

$$Pr42 = \frac{45}{57} \times 100 = 78.9$$

Enter the value 80 in **Pr42**.

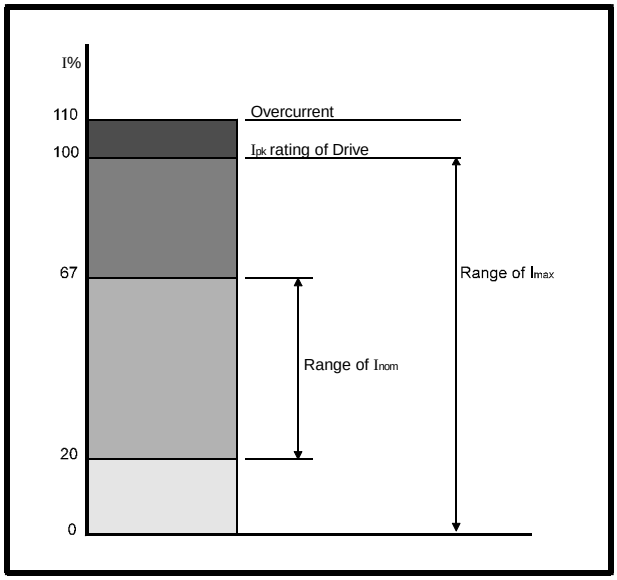

Figure 9–1 Relationship between maximum current (Pr42) and nominal current (Pr45)

The default value of **Pr42** is 100, which makes I_{max} equal to I_{pk}.

Pr45 — Nominal current

This is the maximum continuous current that can flow in the motor without overheating and possibly permanently damaging the motor. This value is entered in **Pr45**, and is calculated as the percentage of I_{pk}.

Pr80 — I^2t protection

The effect of the values of **Pr42** and **Pr45** on the operation of the Drive are important. When the motor current exceeds the value of $I_{nom,}$ (**Pr45**) the Drive starts integrating the current with respect to the time constant set in **Pr55**. This integrated value is displayed in **Pr80**. The Drive trips when the value of **Pr80** reaches 100%.

If the motor current drops below the value set in **Pr45**, the integrator starts to count down towards 0. This allows for short periods of high over-load to be tolerated, particularly during acceleration and deceleration cycles.

Current in excess of 110% of I_{pk} (which would indicate an abnormal condition such as a short-circuit or a ground fault in the motor circuit) activates a hardware trip circuit. Over-current trip **OC** is produced and the Drive output is disabled.

Analysis of the effective current

When the specifications of the mechanical system and of the duty cycle are known, it is possible to evaluate the effective current I_{eff} to verify whether it exceeds $\mathbf{I_{nom}}$ at any part of the cycle. It is possible then to calculate the amount of time spent in the overload region during a particular cycle, and determine when possible [Ixt] limiting will occur.

Taking the example operating cycle shown below:

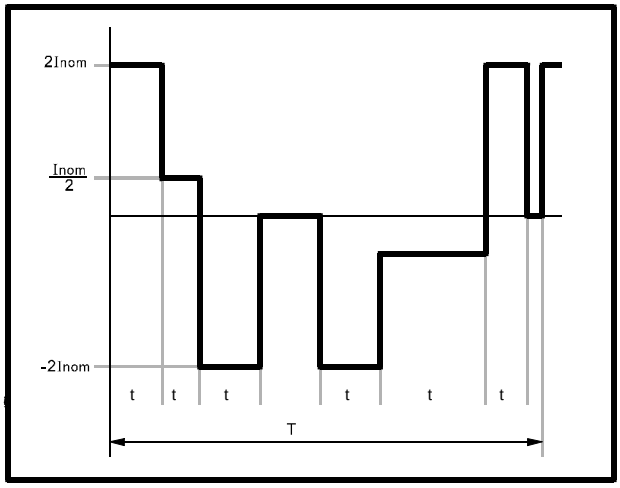

Figure 9–2 Example operating cycle

The effective current is given by:

$$\mathbf{Ieff} = \sqrt{\left(\frac{I_1^2 t_1 + I_2^2 t_2 + \ldots + I_6^2 t_6}{T}\right)}$$

where $\mathbf{I_1}$ to $\mathbf{I_6}$ are the current levels during time periods $\mathbf{t_1}$ to $\mathbf{t_6}$.

To ensure that short-term overload does not cause the $\mathbf{I^2t}$ integration to reach 100%, the calculated value of I_{eff} must not exceed the value of I_{nom}.

9.4 Methods of speed control

Any of the following three methods can be used as a speed reference:

- Analog input signal
- Digital input signal
- Frequency input signal

Caution

Before changing the method of speed control, set parameter b2 at 0 to disable the Drive. The Drive can subsequently be enabled by setting b2 at 1.

Using an analog speed reference

The speed of the motor is controlled by applying an analog speed reference voltage having a maximum range of ±10V to terminals B9 and B10. This voltage can be either a single-ended or differential signal. The maximum speed is set by the value of **Pr99**, but this can be trimmed using the full-scale speed potentiometer. This has a ±20% window of adjustment around **Pr99**.

Use the following procedure to set up the Drive for analog speed control:

1. Set parameter **b6** at 0.
2. Set parameter **b14** at 1.
3. Set parameter **b17** at 0.

Using a digital speed reference

The speed of the motor can be controlled by values in **Pr0**, **Pr1**, **Pr2** and **Pr3**. This allows for up to four pre-set speed settings. These values can be selected using any of the following methods:

- **Direct selection** using **Pr20**
- **Sequential selection** using **Pr19**
- **Digital input control** using terminals **B4** and **B5**

The permissible range of values is determined by the value programmed in **Pr99** as follows:

Value of Pr99	Maximum value of reference parameters
200 to 3000	3000
>3000	6000

Direct selection

1. Set **b6** at 0.
2. Set **b16** at 0.
3. Set **b17** at 1.
4. Set **Pr21** at 0.

Enter the required pre-set speed parameter in **Pr20** (eg. to select **Pr2**, enter 2 in **Pr20**) using serial communications or directly using the Control Keypad.

Sequential selection

1. Set **b6** at 0.
2. Set **b16** at 0.
3. Set **b17** at 1.
4. Set **Pr21** at 1.

The pre-set speeds are selected in sequence at intervals defined by **Pr19**.

Digital input control

1. Set **b6** at 0.
2. Set **b16** at 0.
3. Set **b17** at 1.
4. Set **Pr21** at 2.

The required parameter is selected by applying signals to the digital inputs as follows:

Parameter	Terminal	
	b4	b5
Pr0	0V	0V
Pr1	0V	+24V
Pr2	+24V	0V
Pr3	+24V	+24V

Using a frequency speed reference

The speed and direction of the motor are controlled by applying a pulse reference to terminal C7 and a direction signal to terminal C8. The speed of the motor is directly controlled by the frequency of the pulse reference signal.

Scaling is as follows:

When **Pr99** ≤3000,
409.6kHz gives 3000 RPM
When **Pr99** >3000,
409.6kHz gives 6000 RPM

Reliable operation at 409.6kHz occurs when the step height of the frequency input pulse train is ≥15V.

Make the following settings for frequency reference control:

1. Set **b14** at 0.
2. Set **b15** at 0.
3. Set **b17** at 0.

Ramps can be selected by setting **b7** at 1. When selected, all three methods of speed control will be subject to the ramps during changes in speed. All ramps (acceleration and deceleration in forward and reverse) are independently controlled, and can be set in terms of milliseconds per 1000 RPM in **Pr9**, **Pr10**, **Pr11** and **Pr12**.

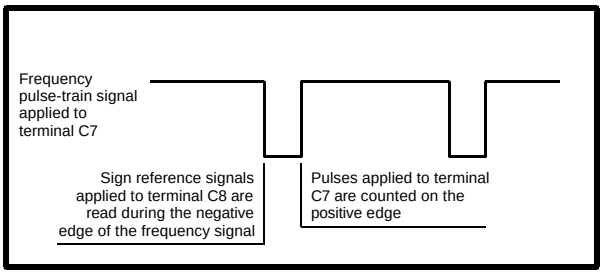

Figure 9–3 Interpretation of pulses using frequency reference control

9.5 Methods of torque control

Any of the following three methods can be used to run the Drive in torque control:

- Analog input signal
- Digital input signal
- Speed control with external torque limit

Warning

Before selecting torque control, set parameter b2 at 0 to disable the Drive, and ensure the motor is at standstill. The Drive can subsequently be enabled by setting b2 at 1.

Analog torque control

This mode of operation allows the shaft torque from the motor to be controlled using an analog reference applied to terminals B9 and B10. This input can also be used for master/slave applications where the motors or their loads are coupled together in some way to allow load sharing. The master Drive would be in speed control, and the current demand output from the master would be used as the torque reference for the slave.

Protection against excessive motor speed is given by the Drive tripping on trip **OS** if the speed set in **Pr58** is exceeded.

Use the following procedure to set the Drive in analog torque reference control:

1. Set **b2** at 0 to disable the Drive
2. Ensure the motor is stopped.
3. Set **b6** at 1 to select torque control.
4. Set **b8** at 0 to select analog torque reference

Digital torque control

The torque reference for the Drive is controlled by parameter **Pr8**, and is set as the percentage of I_{max}. The range of **Pr8** is –100 to +100; the maximum corresponds to the value of maximum current. (See **Pr42** in Chapter 10 *List of Parameters*). This allows the torque output to be controlled using serial communications.

Protection against excessive motor speed is given by the Drive tripping on trip **OS** if the speed set in **Pr58** is exceeded.

Use the following procedure to set the Drive for digital torque reference control:

1. Set **b2** at 0 to disable the Drive.
2. Ensure the motor is stopped.
3. Set **b6** at 1 to select torque control.
4. Set **b8** at 1 to select digital torque reference.

Speed control with external torque limit

Speed control with external torque limit allows the maximum speed to be controlled while the Drive is in torque control.

When the motor is under load, the Drive tries to run the motor at the speed set by the speed reference. It is prevented from doing so while the output current (torque) is limited by the value set by the torque input signal. When the load reduces sufficiently to reduce the output current to below the value set by the torque input signal, the motor speed attains the value set by the speed reference.

When parameter **b11** is set at 1, terminal B1 becomes an analog speed reference input, and controls parameter **Pr41**. This sets the value of current limit which in effect applies torque control to the motor.

Use the following procedure:

1. Set **b6** at 0 to select speed control. (See **Methods of speed control** for setting up the Drive for the required speed reference).
2. Set **b11** at 1 to select external torque limit.
3. Set **b56** at 0 to disable the external trip function of terminal B1.
4. Apply the required signal to terminal B1 (±10V gives torque limited to ±100% of I_{pk}). (See **Pr42**).

The instantaneous values of current limit are given as percentages of **Pr41**, and are shown in the following read-only parameters:

Pr39 Value of the analog current limit signal on terminal B1.

Pr40 Value of the analog current reference; this can be made available at terminal B16 as the Clamped Current Demand.

Pr41 Clamped Current Reference threshold, corresponding to the lowest of the values among **Pr42**, **Pr43**, and **Pr39**.

Pr80 Shows the value of the $\mathbf{I^2t}$ computation. $\mathbf{I^2t}$ limitation will occur when **Pr80** reaches 100.

9.6 Spindle orientation

This function allows the Drive to be stopped at a pre-defined position when under analog or digital speed reference control. The orientation position for the shaft is set in **Pr27**. The range of **Pr27** is 0 to 2047, giving a resolution of 0.176°. Spindle orientation can be initiated in either of two ways as follows:

Set **b53** and **b18** at 1 (Stop, orientate and hold with ramps) using serial communications.

Set **b53** at 1, and apply a Stop signal to terminal B6.

When a Stop signal is received, the motor decelerates to the orientation speed set in **Pr54**. The motor continues rotating in the same direction until the orientation position is reached.

Parameter **b41** (Shaft orientation) is set at 1 under the following condition:

Pr53 ≥ **Pr27** – **Pr83**

During orientation, the value of **Pr37** is used for the position loop gain.

9.7 Methods of stopping

Normal stop-and-hold

When a Stop signal is applied to terminal B6 (terminal B6 can alternatively be controlled by **b88**), or **b18** is set at 1, the Drive brings the motor to standstill, but the Drive does not become disabled. The motor can be stopped without deceleration ramp (stopping under current limit), or ramps can be included to make the stop smoother. This keeps the motor under torque control, and consequently holds the motor at the stopped position. The motor stops at a random position unless some external control loop is used.

Ramps are selected by setting **b22** at 1. When a Stop signal is received, the Drive decelerates the motor at the rate given in **Pr11** or **Pr12**. Selection of ramps for stop-and-hold mode is independent of whether ramps are selected to act on the speed reference.

Use the following procedure to select Stop-and-hold mode:

1. Configure terminal B6 as follows for the voltage sense of the Stop signal:

b88 setting	Stop signal
0	+24V
1	0V

2. Set **b22** at 1 for stopping with ramps.

3. Set **Pr11** and **Pr12** for deceleration rate in milliseconds per 1000 RPM.

Limit switch stop-and-hold

When a limit-switch is triggered, the Drive inhibits rotation in that direction, and stops the motor. The motor can be stopped without deceleration ramp (stopping under current limit), or ramps can be included to make the stop smoother. When the motor has stopped, the Drive will keep the motor in torque to prevent the mechanical system from moving past the end-stop.

Ramps are selected by setting **b23** at 1. When the limit-switch is activated, the Drive decelerates the motor at the rate set in **Pr11** or **Pr12**. Selection of ramps for the limit-switch stop-and-hold mode is independent of whether or not ramps are selected to act on the speed reference.

Use the following proceudre to configure the limit-switch stop functions:

1. Set **b16** at 1.
2. Set **b23** at 1 to select ramps.
3. Apply the limit-switch signals as follows:

Limit-switch	Terminal	
	B4	B5
Forward	X	0
Reverse	0	X

0 = logic 0 = 0V = Stop
(X = don't care)

Stop, hold and orientate

See *Spindle orientation* earlier in this chapter.

9.8 Quick reference

Note

A maximum speed limit is programmable in Pr58. The Drive is disabled if the motor speed exceeds the programmed value.

Speed control

Make the following settings:

Type of speed reference	b6	b14	b15	b17
Analog	0	1	X	0
Digital	0	X	X	1
Frequency	0	0	0	0

Ramps can be applied to all types of speed reference by setting **b7** at 1.

Torque control

Make the following settings:

Type of torque reference	b6	b8	b11	b56
Analog	1	0	0	1
Digital	1	1	0	1
Speed control with external torque limit	0	X	1	0

9.9 Programmable outputs

Programmable digital outputs

The digital outputs on terminals B7 and B8 can be configured to show the state of a bit parameter. These signals can then be used to indicate the present status of the Drive.

Terminal B7 is selected using **Pr30**.

Terminal B8 is selected using **Pr31**.

The following parameters can be selected for terminals B7 and B8:

Pr30 Pr31	Parameter	Indication
0	b89	I^2t integrating (alarm)
1	b91	Over-temperature (pre-alarm)
2	b84	Over-current (alarm)
3	b38	Direction of motor rotation
4	b41	Motor status (running/stopped)
5	b42	At-speed status
6	b48	Speed loop saturation status

Programmable analog output

The analog output on terminal B16 can be configured to produce an analog signal proportional to one of the following:

- Motor current
- Clamped current demand
- Post-ramp speed reference

Make the following settings to select the required indication:

b12	b13	Parameter	Indication
1	X		Motor current. Scaling: 16V pk–pk = $I_{peak\text{-}peak}$
0	0	Pr40	Clamped current demand. This output can be used as the torque reference for a slave Drive (See Methods of torque control). Scaling: ±10V = ±100% of I_{max}
0	1		Post-ramp speed reference. Scaling: ±5V = ±6000 RPM

The output from terminal B17 is the analog tachogenerator signal.

9.10 Speed calibration

The Drive requires a 10V input signal for maximum speed. Some motion controllers produce an output signal of 8V to 9V for maximum speed demand, reserving a margin of 1V to 2V to cover tracking errors. The scaling of the input speed reference is set in **Pr99** in steps of 200 or 400 RPM. The full-scale speed calibration potentiometer allows the full-scale speed to be adjusted to produce the correct speed for a specified speed reference input signal.

Setting the scaling in Pr99

To find the required value of **Pr99**, use the following equation:

$$\mathbf{Pr99} = \frac{\mathbf{V_{ref}} \times \mathbf{n_{max}}}{\mathbf{V_{out}}}$$

where:

$\mathbf{V_{ref}}$ = Maximum speed reference signal of the Drive

$\mathbf{n_{max}}$ = Required maximum speed (2400 RPM)

$\mathbf{V_{out}}$ = Output of the controller corresponding to maximum speed.

Taking the case of a controller which produces an 8V reference signal for a required speed of 2400 RPM, the equation becomes as follows:

$$\mathbf{Pr99} = \frac{\mathbf{10 \times 2400}}{\mathbf{8}} = \mathbf{3000}$$

After the value has been entered in **Pr99**, set the controller output at maximum to apply the maximum speed reference signal to the Drive. Trim the speed to the exact value using the full-scale speed potentiometer.

Pr6 — Zero-speed offset

An offset in the speed reference signal will cause the motor to rotate slowly when zero speed is demanded. To compensate for this offset, enter the resulting motor speed in **Pr6** to the nearest 0.1 RPM.

9.11 Resolver phasing

Motor and resolver assemblies are supplied with correct phasing. Use the following procedure only when you are unsure of the phasing of a motor and resolver.

Warning

Disconnect the motor shaft from the driven load before using this procedure. During this procedure, the Drive will apply rated current to the motor. It is essential that Pr45 is set correctly, or the Drive may damage the motor.

1. Set parameter **b2** at 0.
2. Apply +24V to terminal B14.
3. Set parameter **b49** at 1. The motor shaft rotates at approximately 60 RPM.
4. If the motor shaft rotates anticlockwise when viewed from the shaft end of the motor, remove AC power from the Drive. Reverse any two motor phase connections. Repeat the procedure.
5. Check that the value of **Pr83** increases while the motor rotates. If this is not the case, remove AC power from the Drive. Check the resolver connctions. Repeat the procedure.

The resolver signal is now in phase with the motor.

9.12 Commissioning

Use the following procedure:

1. Remove the connections from terminals B9 through B17.
2. Apply AC power to the Drive. Check the display first shows **02.xx**, then **CAL**, then **rdY**.
3. If the Drive is being controlled by serial communications, check the correct transmission format is being used.
4. Unless the **Hold zero speed** function is required, disconnect terminal **B6** and check the value of **b18** (digital stop selector) is **0** (default value).
5. Replace the connections that were removed in step **1**. Make sure that all terminals are fully tightened on the Drive, motor and resolver.
6. Connect the motor to the load. Perform typical working cycles for a period of at least 15 minutes. Check the following:

   If the value of **b33** = 0, at least one alarm condition exists. Investigate as necessary.
   If the value of **b89** = 1, the Drive has entered the **I^2t** region. The value of **I^2t** is displayed in **Pr80** as a percentage (fully-integrated value = 100). It may be necessary to change the setting of **Pr45**, or reduce the duty cycle to reduce the effective current I_{eff}.

9.13 PID-loop calibration

In most cases, only small changes will be needed to the values of the PID and speed-loop parameters to optimize the system for the application. If a large change is necessary (for example, due to a load inertia greater than three-times the motor inertia), use the following procedure:

Warning

During calibration, the motor is required to Drive the load. Take care to ensure the following:

It is safe for the machinery to be operating

The limit switches are not over-ridden

The default values of the dynamic parameters (PID) are valid for typical spindle applications. It is recommended that the PID functions should not be disturbed until the Drive is commissioned and its behaviour during a normal duty cycle has been observed. The PID parameters are as follows:

Parameter	Default value	Function
Pr13	100	Proportional gain Range 0 to 255 Resolution 1
Pr14	0	Derivative gain Range 0 to 128 Resolution 1
Pr15	5	Integral gain Range 0 to 255 Resolution 1
Pr7	2	Speed-loop bandwidth limit Range 1 to 7 (320Hz to 5Hz)

Procedure

Preliminary settings

1. Connect the motor to the load.
2. Set **b7** at 0 (no ramps).
3. Set **b18** at 0.
4. Set **Pr58** at maximum speed + 10%.
5. Ensure that **Pr99** is set for the full-scale speed of the motor.

Digital reference settings

1. Set **b17** at 1.
2. Set **Pr0** at 0.
3. Set **Pr1** at **Pr58** ÷ 5.
4. Set **Pr2** at 0.
5. Set **Pr3** at – (**Pr58** ÷ 5).
6. Set **Pr19** at 2.5 (0.2Hz).

   Note that this setting depends on the transmission ratio and the mechanical limitations of the system.
7. Set **Pr21** at 1.

Analog reference settings

1. Set **bl7** = 0.

Connecting the terminals

1. Disconnect terminal B6 (programmable input).
2. Disconnect terminals B9 and B10 (analog reference input).
3. Link terminal B9 to terminal B11 (zero volts).
4. Set up a signal generator to deliver the following output:

   Square-wave

   Amplitude: –2V to +2V

   Frequency: 0.2Hz
   (See step 6 of *Digital reference settings*)
5. Connect the non-inverted output of the signal generator to terminal B10, and the common to terminal B11.
6. Set up an oscilloscope as follows:

   Both channels at 1V per division

   Timebase at 20ms per division

   Channel B trigger
7. Attach probe **A** of the oscilloscope to terminal B16, and probe **B** to the signal generator output. Attach the ground clips of the probes to terminal B11 or B18 (0V common)

Note

During the next stage, the Drive will cause the motor shaft to oscillate. Adjustment may be made as follows:

Using an analog reference signal

If the amplitude of oscillation is excessive, increase the signal generator frequency. If the speed is too high, reduce the signal generator output voltage to not less than ±1V.

Using a digital reference

If the speed is excessive, decrease the values of **Pr0**, **Pr1**, **Pr2**, **Pr3**. Decrease the value of **Pr19** to reduce the scan time.

Setting the PID gains

1. Apply +24V to terminal B14 and set **b2** at **1** to enable the Drive.

Check the waveform on the oscilloscope. If the waveform is similar to that shown in Figure 9–4 the proportional gain is too low.

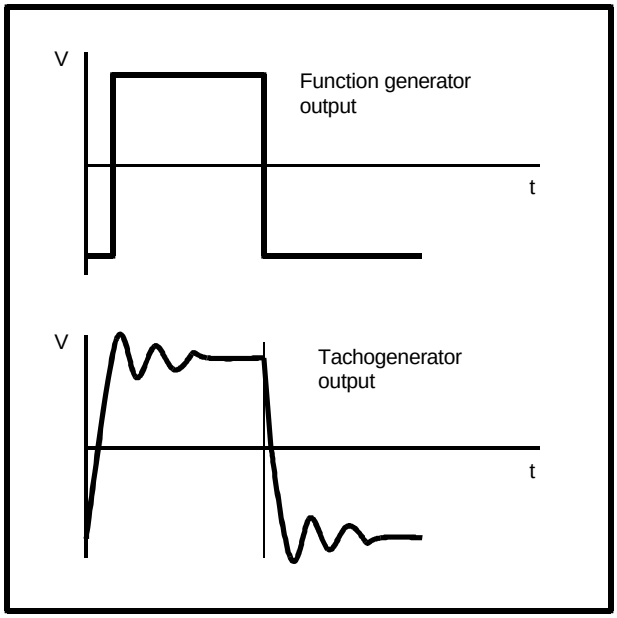

Figure 9–4 Waveform resulting from proportional gain being too low

Increasing the value of **Pr13** (proportional gain) will achieve a waveform similar to that shown in Figure 9–5, which shows low derivative gain.

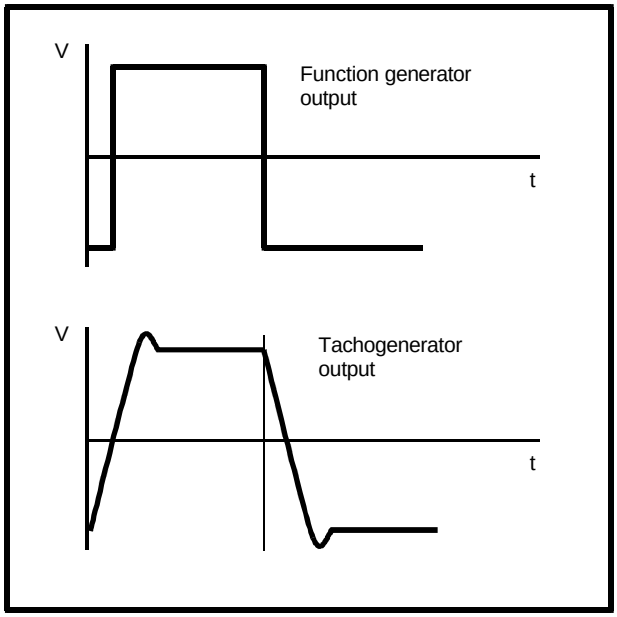

Figure 9–5 Waveform resulting from derivative gain being too low

Increasing the value of **Pr14** (derivative gain) will reduce overshoot at the expense of increased current and possibly increased heating of the motor. An ideal response can be achieved as shown in Figure 9–6.

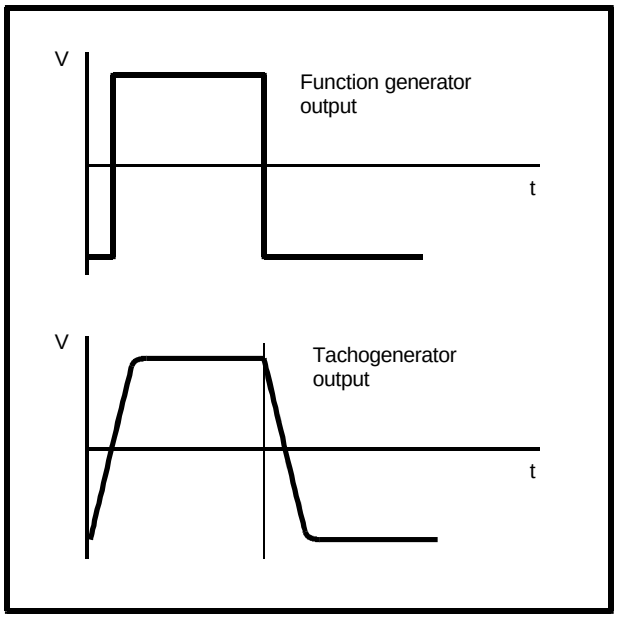

Figure 9–6 Waveform showing ideal response

Excessive derivative gain can have the following effects:

Excessive heating of the motor due to extra current

Motor shaft oscillation $\mathbf{I_{2t}}$ current limiting

Reduced speed of response as shown in Figure 9–7

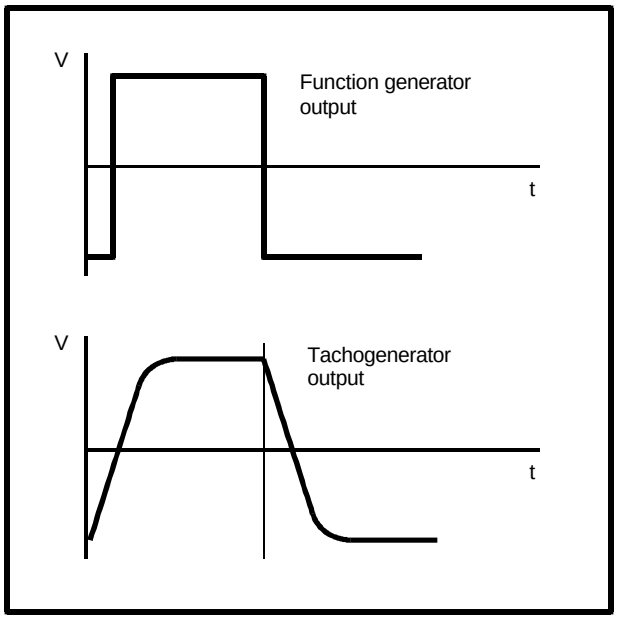

Figure 9–7 Reduced speed of response caused by excessive derivative gain

Pr15 (integral gain) is not likely to require adjustment. If adjustment is required, the value must not exceed 250. If stability of position control or anomalous responses to stop signals persist, check the operation of the position controller.

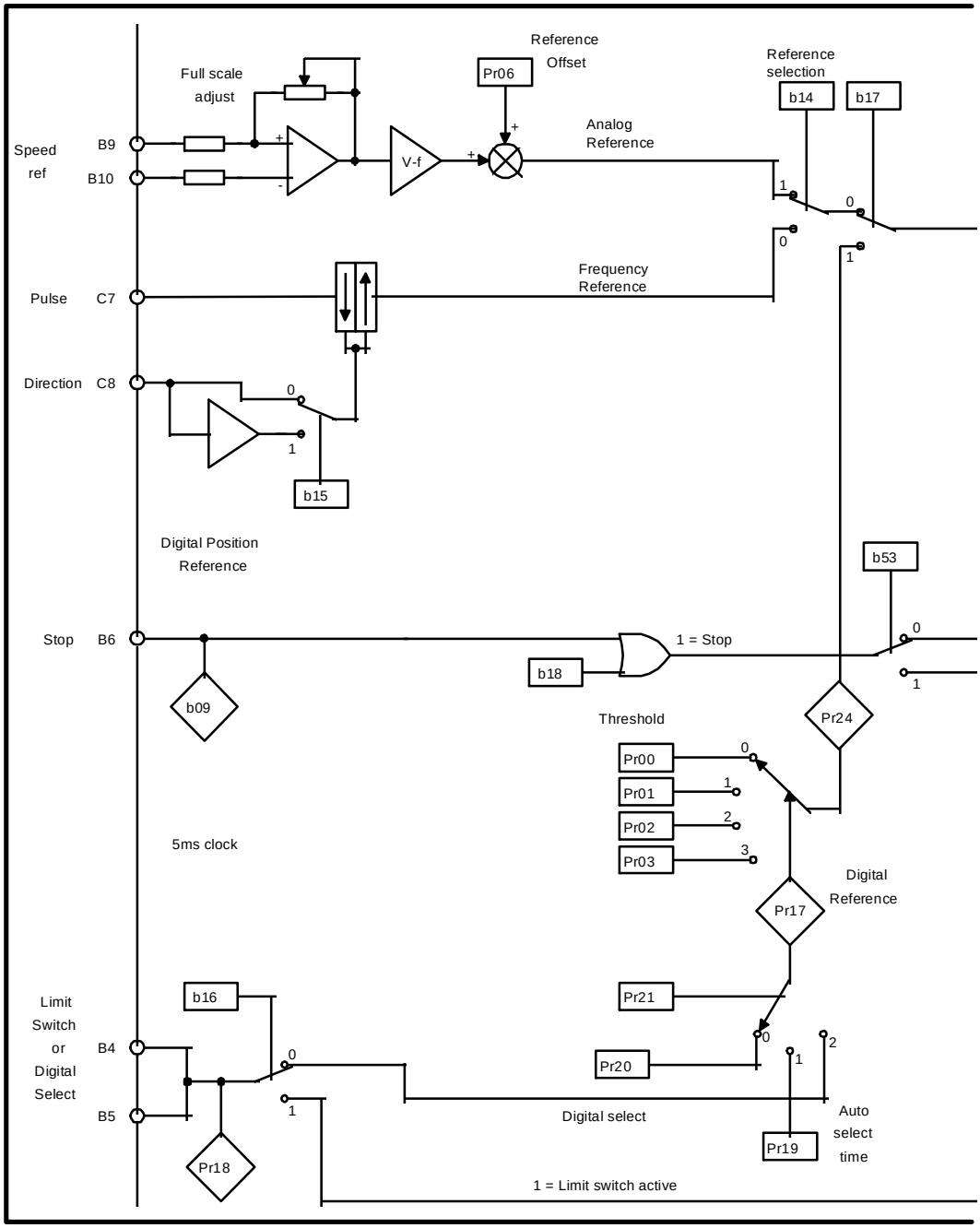

Figure 9–8 Logic diagram showing speed reference selection and position control

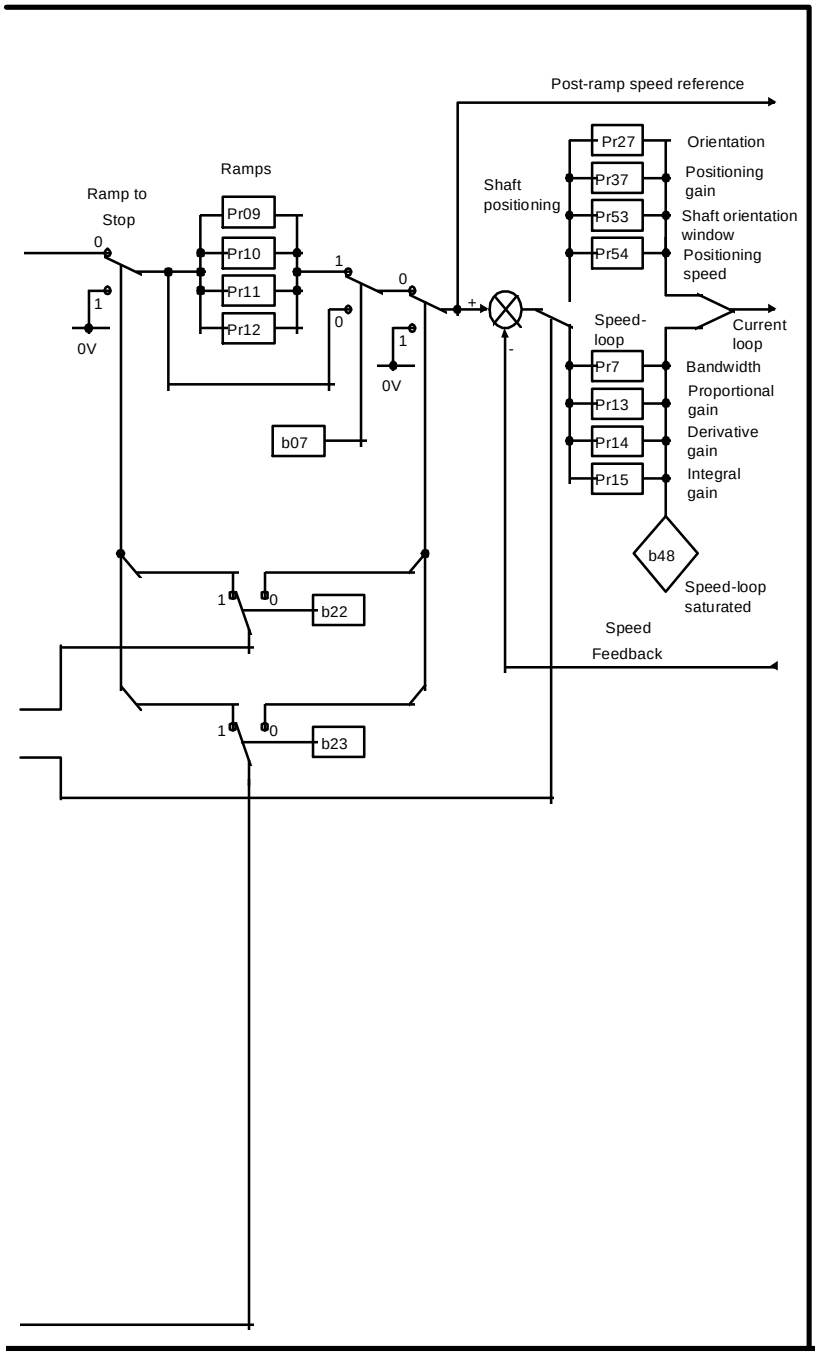
Post-ramp speed reference
Ramps
Ramp to
Stop
Pr09
Pr10
Pr11
Pr12
0
1
0V
1
0
0
1
0V
b07
Shaft
positioning
Pr27
Pr37
Pr53
Pr54
Orientation
Positioning
gain
Shaft orientation
window
Positioning
speed
Speed-
loop
Current
loop
Pr7
Pr13
Pr14
Pr15
Bandwidth
Proportional
gain
Derivative
gain
Integral
gain
b48
Speed-loop
saturated
1
0
b22
1
0
b23
Speed
Feedback

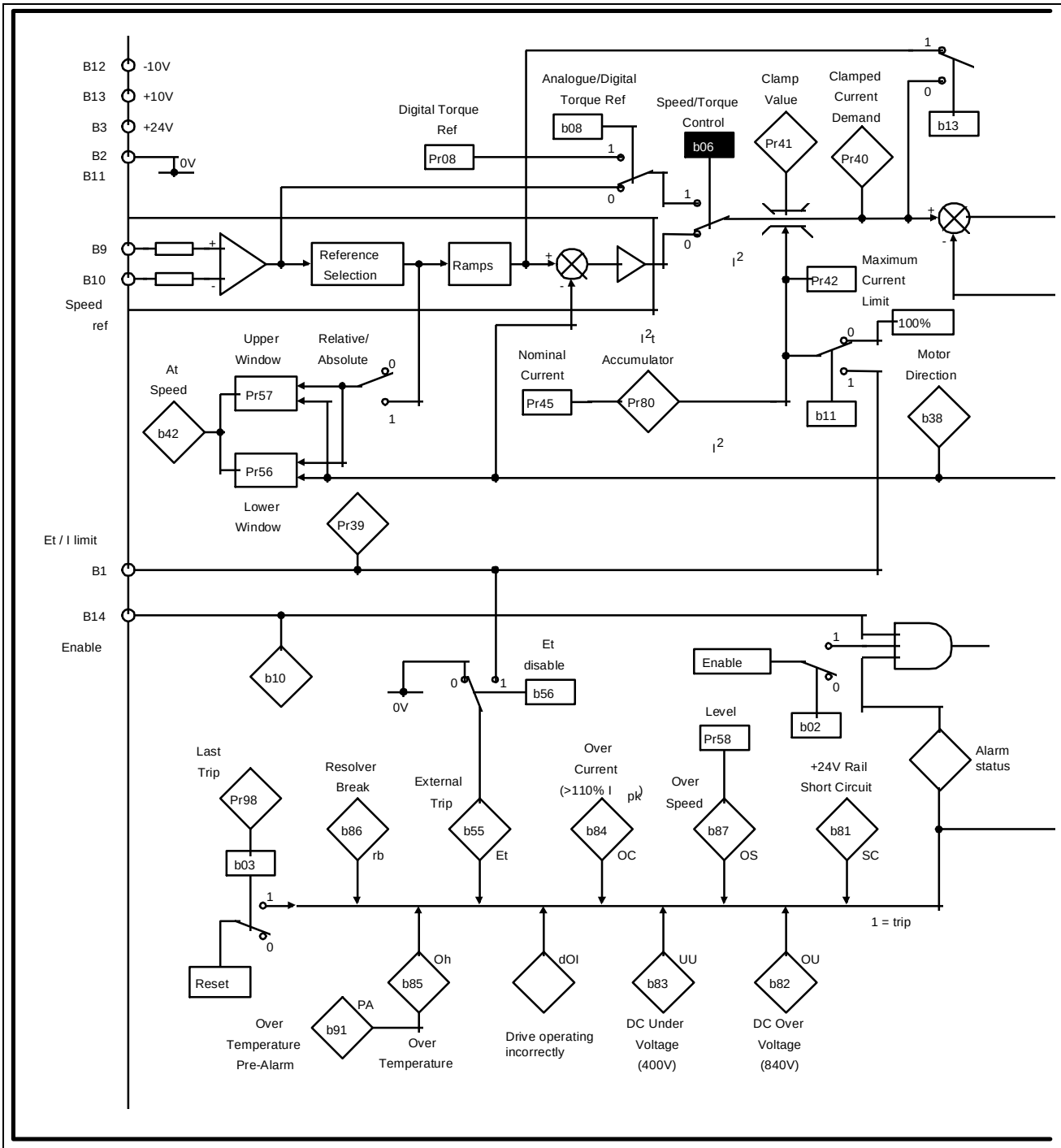

Figure 9–9 Logic diagram showing the torque loop, trip logic and I/O

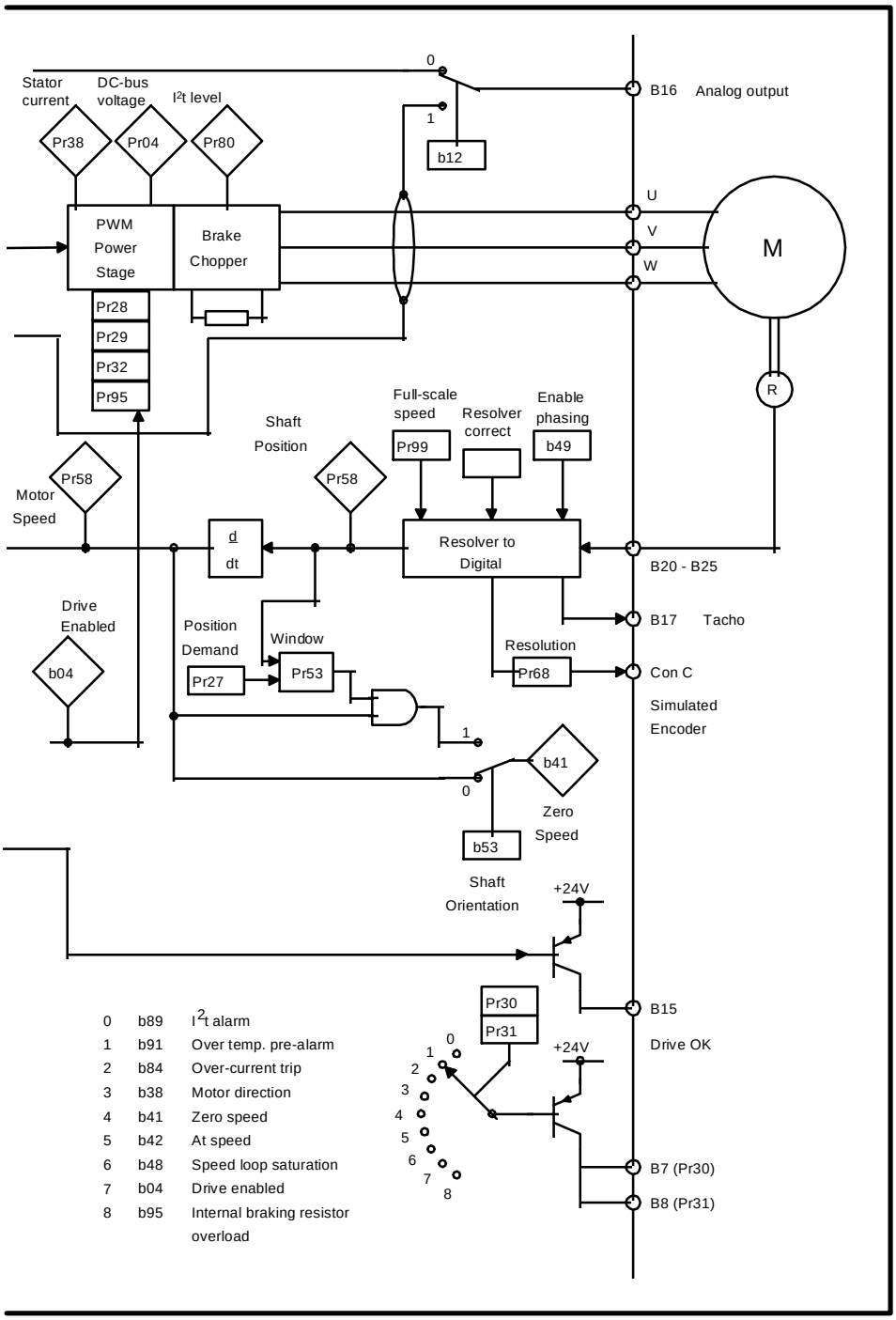
Stator current
DC-bus voltage
I2t level
Pr38
Pr04
Pr80
0
1
b12
B16
Analog output
U
V
W
M
PWM Power Stage
Brake Chopper
Pr28
Pr29
Pr32
Pr95
R
Full-scale speed
Resolver correct
Enable phasing
Pr99
b49
Shaft Position
Pr58
Pr58
Motor Speed
d
dt
Resolver to Digital
B20 - B25
Drive Enabled
b04
Position Demand
Pr27
Window
Pr53
Resolution
Pr68
B17
Tacho
Con C
Simulated Encoder
1
0
b41
Zero Speed
b53
Shaft Orientation
+24V
Pr30
Pr31
B15
Drive OK
+24V
B7 (Pr30)
B8 (Pr31)
0 b89 I2t alarm
1 b91 Over temp. pre-alarm
2 b84 Over-current trip
3 b38 Motor direction
4 b41 Zero speed
5 b42 At speed
6 b48 Speed loop saturation
7 b04 Drive enabled
8 b95 Internal braking resistor overload

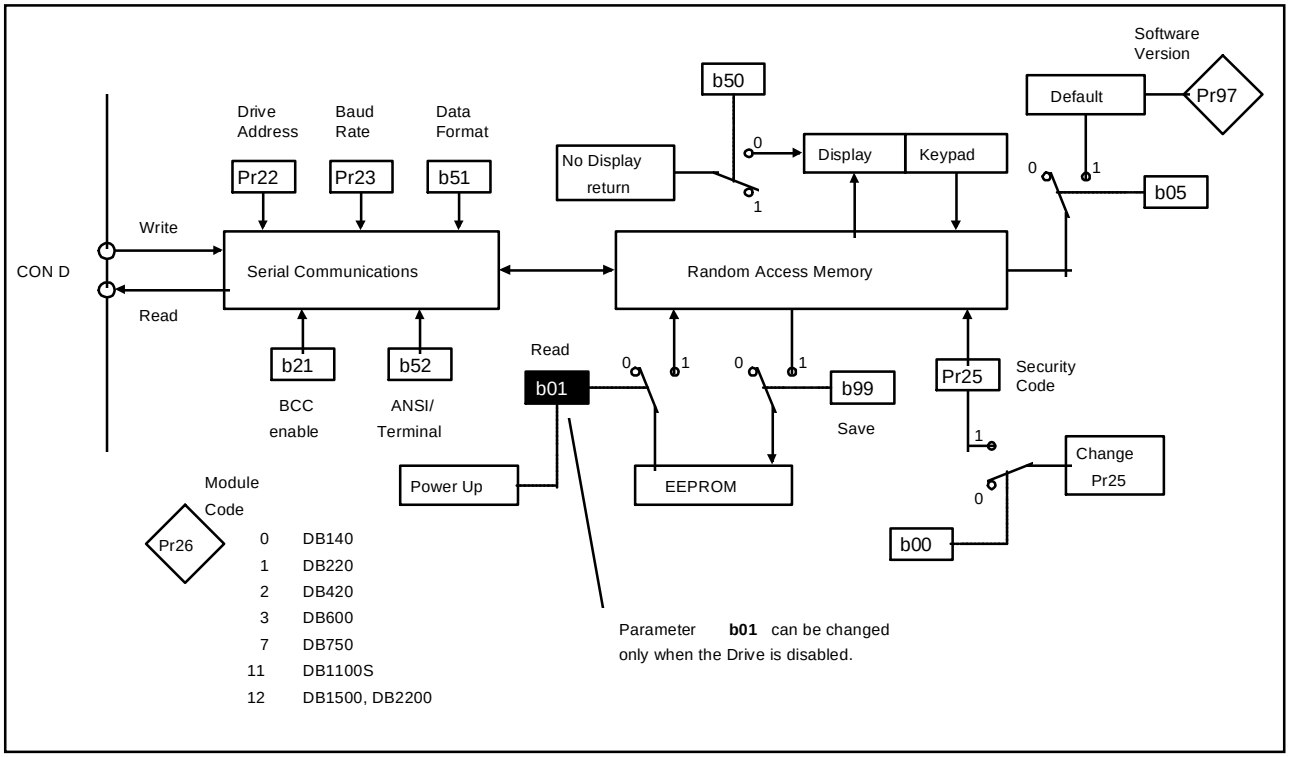

Figure 9–10 Select pulse offset control switching, or limit-switch function