12 Serial Communications

12.1 Introduction

Serial communications can be used by a host computer or plc to read and edit parameters, and control any function on the drive. The serial communications port is an RS422/RS485 specification, and allows the host to communicate with up to 32 drives on a single line. The protocol is industry standard ANSI x 3.28–2.5–A4.

12.2 Connecting to a Drive

RS485 and RS422

RS485 uses 4-wire differential lines which ensure a high level of immunity to noise. It also has high common-mode rejection.

RS485 full-duplex four-wire connection allows multi-drop links to be made to a maximum of 32 Drives. See Figure 12–1. The maximum permissible cable length for each link is 1200m.

On the final Drive in each serial communications link, connect the following pins in order to terminate the receive line with the internal line termination resistor:

Pin 8 to pin 7
Pin 4 to pin 3

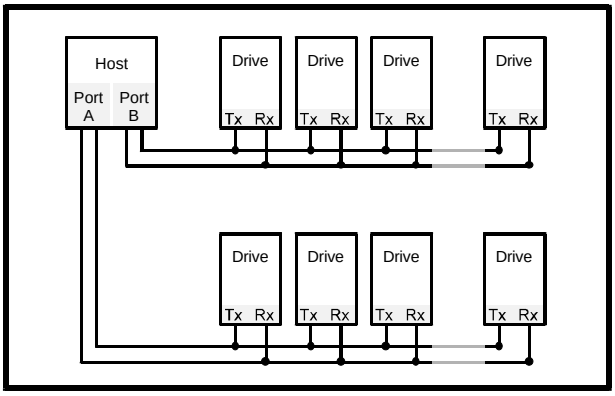

Figure 12–1 Up to 32 Drives can be connected to each communications port of the host computer

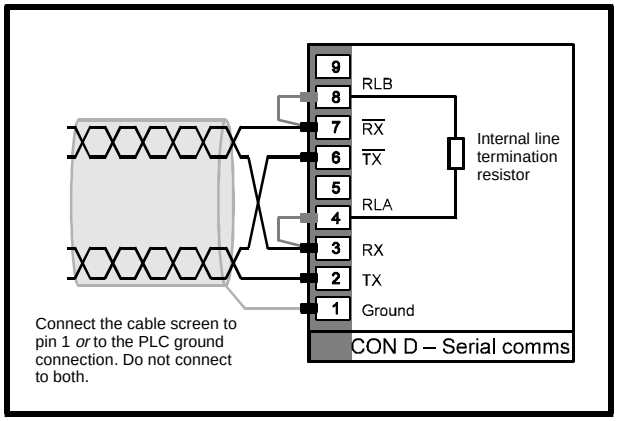

Figure 12–2 Connections for 4-wire RS485 or RS422 serial communications

Serial communications connector

Pin No.	Function	Type	Description
D1	GND		Ground
D2	TX	Out	Transmit signal (non-inverted)
D3	RX	In	Receive signal (non-inverted)
D4	RLA		Network terminating resistor
D5	FREQOUT	Out	Frequency output
D6	$\overline{TX}$	Out	Transmit signal (inverted)
D7	$\overline{RX}$	In	Receive signal (inverted)
D8	RLB		Network terminating resistor
D9	DIROUT	Out	Direction output

12.3 Serial communications configuration

The configuration for the serial port must be determined before attempting to communicate with the Drive. These parameters should be set up using the control keypad.

Baud rate

The Baud rate is selected using parameter **Pr23**. The selected rate must be the same as that of the host computer.

Data format

The data field format is selected using bit 51

7-bit plus parity (bit 51 set at 0)

One start-bit
Seven data bits
One even parity bit
One stop bit

8-bit, no parity (bit 51 set at 1)

One start bit
Eight data bits
One stop bit

12.4 Message structure

Serial messages consist of the following:

Control characters
Serial address code
Parameter identifier
Data field
Block checksum (BCC)

Control characters

If a message is initiated from a keyboard, control characters may be entered by holding down the CTRL key and pressing the key shown in the table below:

Character	Purpose	ASCII code (HEX)	CTRL + key
EOT	Reset Message begins	04	D
ENQ	Enquiry Interrogate the Drive	05	E
STX	Start of text	02	B
ETX	End of text	03	C
ACK	Acknowledge (Go to next parameter)	06	F
BS	Backspace (Go to previous parameter)	08	H
NAK	Negative acknowledge (Repeat same parameter)	15	U
CR	Carriage return	0D	M

Serial address code

Each Drive on a serial link must have a unique address. This allows the host computer to communicate with each Drive individually. The Drive address code is entered in **Pr22**, and can be any value between 1 and 32. (Drive address 00 has a special use — see *Addressing all Drives* below). Each digit of the address is transmitted twice: to address Drive number 08, the following must be transmitted:

0	0	8	8

Addressing all Drives

It is possible to send an instruction to all Drives on a serial link using Drive address 00. All Drives will receive the instruction, but none will transmit an acknowledgment. This can be useful for ensuring that all Drives on a flow-line receive a start signal at the same instant.

Parameter identifier

To address an individual parameter, the host must send a code that relates to the parameter. There are two types of parameter in the SpindAx, as follows:

Numerical parameters	Pr00 to Pr99 (Parameter identity 000 to 099)
Bit parameters	b00 to b99 (Parameter identity 100 to 199)

Data field

Data is sent as a numerical value with sign and decimal point. The data field can consist of up to six characters, two of which must be the sign and decimal point. The data field can be shortened when transmitting data to a Drive, since the **ETX** control character (see above) indicates the data is complete. When interrogated, the response of the Drive always has six data characters.

Block checksum

The block checksum character **BCC** is used to check the received message has not been corrupted during transmission. The BCC is a value that is calculated from the ASCII codes of the characters in the parameter identifier and data fields.

The BCC is calculated by using an XOR function. The calculation starts with the first character following the STX (ctrl B) control character. The following example shows how to calculate the BCC.

Example

To change the value of **Pr06** to –35.8

Character	ASCII code	XOR
0	011 0000	
0	011 0000	000 0000
6	011 0110	011 0110
–	010 1101	001 1011
0	011 0000	010 1011
3	011 0011	001 1000
5	011 0101	010 1101
.	010 1110	000 0011
8	011 1000	011 1011
ETX	000 0011	011 1000
8	011 1000	

Note

If the calculated value for the BCC is less than 32 decimal, (20 in hexadecimal) 32 must be added. The resulting character is used as the BCC value.

The BCC can be disabled by setting **b21** at 0, but a CR (ctrl M) character *must* be transmitted in place of the BCC character.

12.5 Messages from host to Drive

Interrogating a Drive

To find the value of a parameter, the host must send a message in the format shown below. No data field is needed.

	Drive address	Pr	
EOT	0 0 1 1	0 0 6	ENQ
Ctrl-D			Ctrl-E

The response from the Drive will be in the format shown below. The data field always consists of six characters.

	Drive address		Pr	Data field		BCC
EOT	0 0 1 1	STX	0 0 6	– 0 3 5 . 8	ETX	8
Ctrl-B		Ctrl-B			Ctrl-C	

If the interrogated parameter does not exist, the Drive replies with the following message:

	Pr	
STX	0 2 8	EOT
Ctrl-C		Ctrl-D

Quick commands

When the Drive has been interrogated, it is possible to extract data from the Drive using the quick commands, without addressing the Drive each time.

NAK Repeat last response

The Drive repeats the data for the same parameter. This is a quick way of monitoring a continuously changing parameter.

ACK Read next parameter

The Drive responds with the data for the parameter with the next number.

BS Read previous parameter

The Drive responds with the data for the parameter with the previous number.

12.6 Writing data to a Drive

To write data to a Drive, the message must be in the format shown below. The data field does not need to be six characters long, since the ETX (ctrl C) character indicates the end of the data. The BCC can be disabled, but a CR (ctrl M) character *must* be transmitted in its place.

	Drive address		Pr	Data field		BCC
EOT	0 0 1 1	STX	0 0 6	– 0 3 5 . 8	ETX	8
Ctrl-B		Ctrl-B			Ctrl-C	

The Drive responds with either of the following:

ACK Message received, understood and carried out.

NAK Message received, but not carried out. The data is out of range, or the message was corrupted during transmission.

The EOT character and Drive address can be omitted from subsequent write instructions to the Drive.

12.7 Terminal mode

Terminal mode uses a simplified protocol. To communicate with a Drive having address 02, the terminal must be opened using the selection string. This is done by transmitting the following message:

	Drive address	
EOT	0 0 2 2	Cr
Ctrl-D		Ctrl-M

The Drive responds by transmitting the following:

0	2	>

The terminal remains in open communication with the Drive until a different selection string is sent.

Interrogating the Drive

To interrogate the Drive, for example, to find the value of parameter **Pr6**, the message sent would be as follows:

Pr	
P 6 =	CR
	Ctrl M

For bit parameter **b24**, the message would be as follows:

	Pr		
P	1 2 4	=	CR
			Ctrl M

Sending commands to the Drive

To send a command to the Drive, the string is composed of the same characters but with the new value inserted after the **=** sign, as follows:

Pr	Data field	
P 6 =	– 0 3 5 . 8	CR
		Ctrl-M

Quick commands

ESC Resets the current command line, clearing it of entered information.

= Requests a repeat of the data for the parameter last addressed.

> Requests the data for the parameter with the next number.

< Requests the data for the parameter with the previous number.

Errors

Plain-language error messages are sent to the terminal, as follows:

Parameter not recognised

Message string does not comply with format.

Parameter not recognised

A number has been given in the Address field which does not apply to any parameter.

Value out of range

Value sent is above or below the maximum or minimum value permissible for the parameter addressed.

Too many characters

Up to 20 characters are permitted in Terminal Mode.

Read Only Parameter

An attempt has been made to write to a read-only (RO) parameter.

12.8 Parameters related to serial communications

Number	Type	Name and description	Range	Resolution	Default
Pr22	R–W	Drive Address	1 to 32	1	1
Pr23	R–W	Baud Rate This parameter can be set only at the control keypad, not by the host computer. Adjust the value to the Baud rate of the host computer	300, 600, 1200, 2400, 4800, 9600,19200.		9600

Number	Type	Name and description	Default	Default Status
b21	R–W	BCC enable When **b21** is set at 0, BCC is disabled When **b21** is set at 1, BCC is enabled	1	Enabled
b51	R–W	Data format When **b51** is set at 0, 8 data bits, no parity is selected When **b51** is set at 1, 7 data bits, even parity is selected This parameter can be set only at the control keypad, not by the host computer.	0	8 bits no parity
b52	R–W	Serial communications mode When **b52** is set at 0, ANSI standard is selected When **b52** is set at 1, Terminal mode is selected	0	ANSI mode